KING INSTRUMENT COMPANY

When it comes to flow...we're instrumental.

TABLE OF CONTENTS

7100 Series ..... **Pages 5 - 7**

- Low flow, high pressure applications; CRNs available
- 400°F maximum temperature; 4,000 psig maximum pressure
- Magnetically coupled dial display; 60mm scale
- 0.6 to 25 gph water; 1 to 120 scfh air

7200 Series ..... **Pages 8 - 9**

- Low cost, low maintenance applications where quality is important
- Precision machined and polished acrylic meter with 127mm scale
- In-line 3/8" to 2" NPT connections
- 1 to 200 gpm water; 4 to 245 scfm air

7310 Series ..... **Pages 10 -12**

- An economical polysulfone meter in a stainless steel case
- Stainless steel, Hastelloy or Teflon wetted parts
- 127mm detachable, direct reading scale
- 0.5 to 160 gpm water; 6.1 to 330 scfm air

7330 Series ..... **Pages 13 - 14**

- Union ends for ease of installation; available with alarm options
- Stainless steel, Hastelloy or Teflon wetted parts
- 127mm detachable, direct reading scale
- 0.5 to 160 gpm water; Liquid Service Only

7430 Series ..... **Pages 15 - 17**

- Low flow, gas purge applications; alarm options available
- 250°F max temp.; 200 psig max pressure
- 65mm or 150mm detachable, direct reading scales
- Horizontal connections; designed for panel mounting
- 66 to 70,000 cc per minute air 0.72 to 1800 cc per minute water

7440 Series ..... **Pages 18 - 20**

- Low flow, gas purge, chemical dosing applications; alarm options available
- 250°F max temperture; 200 psig max pressure
- 65mm or 150mm detachable, direct reading scales
- Vertical connections and stainless steel frame
- 66 to 70,000 cc per min. air 0.72 to 1800 cc per min. water

7450 Series ..... **Pages 21 - 22**

- Sturdy side plate construction; material options for chemical resistance
- Panel-mountable with optional control valve
- 75mm or 150mm detachable direct reading scales
- 0.48 to 7.4 gpm water; 2 to 20 scfm air

7459 Series ..... **Pages 23 - 24**

- Sturdy side plate construction with polycarbonate shield
- High accuracy meter; 250mm detachable, direct reading scale
- 250°F maximum temperature; 350 psig maximum pressure
- 0.22 to 100 gpm water; 0.9 to 350 scfm air

7460 Series ..... **Pages 25 - 26**

- Excellent value in utility glass meter in stainless steel case
- In-line FNPT connections; 75mm detachable, direct reading scale
- 0.5 to 25 gpm water; 2 to 68 scfm air

7470 Series ..... **Pages 27 - 29**

- Excellent value in municipal glass meter in stainless steel case
- In-line FNPT connections; 127mm detachable, direct reading scale
- 0.25 to 116 gpm water; 1 to 245 scfm air

7480 Series ..... **Pages 30 - 32**

- Excellent value in high-flow glass meter in stainless steel case
- In-line FNPT connections; 250mm detachable, direct reading scale
- 0.22 to 132 gpm water; 0.9 to 350 scfm air

TABLE OF CONTENTS

7510 & 7511 Series ..... **Pages 33 - 35**

- Block type, precision machined and polished acrylic meter
- Panel mount with in-line connections
- 50mm, 75mm, 100mm, 127mm, 250mm scales
- 0.12 to 20 gpm water; 0.04 to 60 scfm air

7520 & 7530 Series ..... **Pages 36 -38**

- Block type, precision machined and polished acrylic meter
- Panel mount with horizontal connections and optional metering valve
- 50mm, 75mm, 100mm, 127mm, 250mm scales
- 0.12 to 20 gpm water; 0.04 to 60 scfm air

7610 Series ..... **Pages 39 - 40**

- Versatile and exceptionally durable, fully enclosed glass meter
- In-line connections; material and alarm options
- 127mm detachable direct reading scale
- 0.25 to 116 gpm water; 1 to 245 scfm air

7650 Series ..... **Pages 41 - 42**

- Designed for chemical resistance and purity
- Stainless steel tie rod frame for added safety
- 80mm direct reading scale
- 0.25 to 26gpm water; Liquid Service Only

7710 Series ..... **Pages 43 - 44**

- Superior accuracy and versatility at an excellent value; CRNs available
- Offered with NPT or flange connections; 4-20mA output available
- Magnetically coupled dial display; 120mm dual scale
- 0.55 to 450 gpm water; 4 to 100 scfm air

7720 Series ..... **Pages 45 - 46**

- Unique, Type 1, Grade 1 all PVC meter; NPT or flange connections
- Hastelloy wetted parts for corrosive applications
- 120mm detachable, direct reading scale; 4-20mA output available
- 0.55 to 450 gpm water; Liquid Service Only

7750 Series ..... **Pages 47 - 48**

- 250mm end-to-end length with flange connections.
- Welded construction, no elastomeric O-rings used
- 4-20mA transmitter output available; 120mm detachable scale
- 0.55 to 16.5 gpm water; 2.2 to 76 scfm air

7910 Series ..... **Pages 49 - 51**

- 70 flow ranges in 7 tube sizes; 250mm scale
- Stainless steel case with dual port connections for ease of installation
- 200°F maximum temperature; 300 psig maximum pressure
- 0.22 to 132 gpm water; 0.9 to 350 scfm air

9000 Silver Series ..... **Pages 52 - 54**

- Removable glass metering tube for ease of maintenance
- 35 flow ranges in 6 tube sizes; 200mm and 250mm scales
- Vertical or horizontal NPT or flanged connections
- 0.23 to 85 gpm water; 1.15 to 285 scfm air

Alarm Options ..... **Pages 55 - 61**

- Latching Reed Switch
- Inductive Slot Sensor
- Inductive Ring Sensor
- 4-20 mA Transmitter
- Fiber Optic Sensor
- Barrier/Switch Isolator

Correction Formulas ..... **Pages 62**

Warranty & Policies ..... **Page 63**

Meters

Meter Series	Max Flowrate		Tube Material					Connection		Performance			Options			
	Air	Water	Acrylic	Poly-sulfone	Borosilicate Kinglass	316L SS	PVC	Vertical	Horiz	High Temp	High Press	Chem Resist	Valve	Flange	Alarm	Trans-mitter
7100	120scfh	25gph				✓			✓	✓	✓		✓	✓	✓	
7200	245scfm	200gpm	✓					✓								
7310	330scfm	150gpm		✓				✓				✓			✓	
7330	NA	150gpm		✓				✓				✓			✓	
7430	145scfh	29gph			✓				✓			✓	✓		✓	
7440	145scfh	29gph			✓			✓				✓			✓	
7450	20scfm	7.4gpm			✓				✓				✓			
7459	350scfm	100gpm			✓			✓								
7460	14scfm	25gpm			✓			✓								
7470	245scfm	116gpm			✓			✓	✓			✓		✓	✓	
7480	350scfm	132gpm			✓			✓	✓			✓		✓	✓	
7510	60scfm	20gpm	✓					✓								
7511	60scfm	20gpm	✓					✓								
7520	60scfm	20gpm	✓						✓				✓			
7530	60scfm	20gpm	✓						✓				✓			
7610	245scfm	116gpm			✓			✓				✓			✓	
7650	NA	25gpm			✓			✓				✓				
7710	100scfm	450gpm				✓		✓		✓	✓			✓	✓	✓
7720	100scfm	450gpm					✓	✓				✓		✓	✓	✓
7750	42scfm	16.5gpm				✓		✓		✓	✓			✓	✓	✓
7910	350scfm	132gpm			✓			✓	✓							
9000	288scfm	85gpm			✓			✓	✓			✓		✓	✓	

7100 Series

All 316L stainless steel construction makes this meter suitable for low-flow, high-pressure applications.

DESCRIPTION

Metering Tube	316L SS
Internal Components	316L SS, Hastelloy® C-276
Case and Side Cover	Die-cast Aluminum / Powder Coated with Chemfilm base (RoHS Compliant)
Fitting Material / Type	316L SS ¼" FNPT, horizontal 1/2" and 1" 150# and 300# Flange, Vertical
Scale Cover	304 SS frame Annealed glass window
O-Ring	EPR, Buna N, Kalrez®

PERFORMANCE

Flow Capacities	Water	0.6 to 25 GPH (2.4 to 95 LPH)	
	Air	1 to 120 SCFH (28.3 to 3,400 SLPH)	
Accuracy	± 5% of full scale flow		
Repeatability	1%		
Turndown	10:1		
Ambient Temperature	-40°F to 125°F (-40°C to 52°C)		
Maximum Temperature	**O-Ring**	**Maximum Temperature**	
	EPR	225° F	(107° C)
	Buna N	275° F	(135° C)
	Viton	350° F	(177° C)
	Kalrez	400° F	(204° C)
	No O-ring	400° F	(204° C)
FNPT Connection Pressure	Valve models — 1,500 psig Non-valve models — 4,000 psig		
Flange Connection Pressure	**Temp F**	**150#**	**300#**
	200°	225 psi	600 psi
	300°	200 psi	540 psi
	400°	180 psi	515 psi

OPTIONS

Alarm	Single, Inductive Slot Sensor (Page 57)
Certified Calibrations	ISA RP 16.6
Control Valves	Inlet and outlet
CRNs	All Canadian provinces (316L SS Only)
Rear Mounting Bracket	304 SS
Scales	Any volumetric unit
High Ambient Temp.	See meter maximum temperature.

7100 Specifications

DIMENSION DIAGRAMS (INCHES)

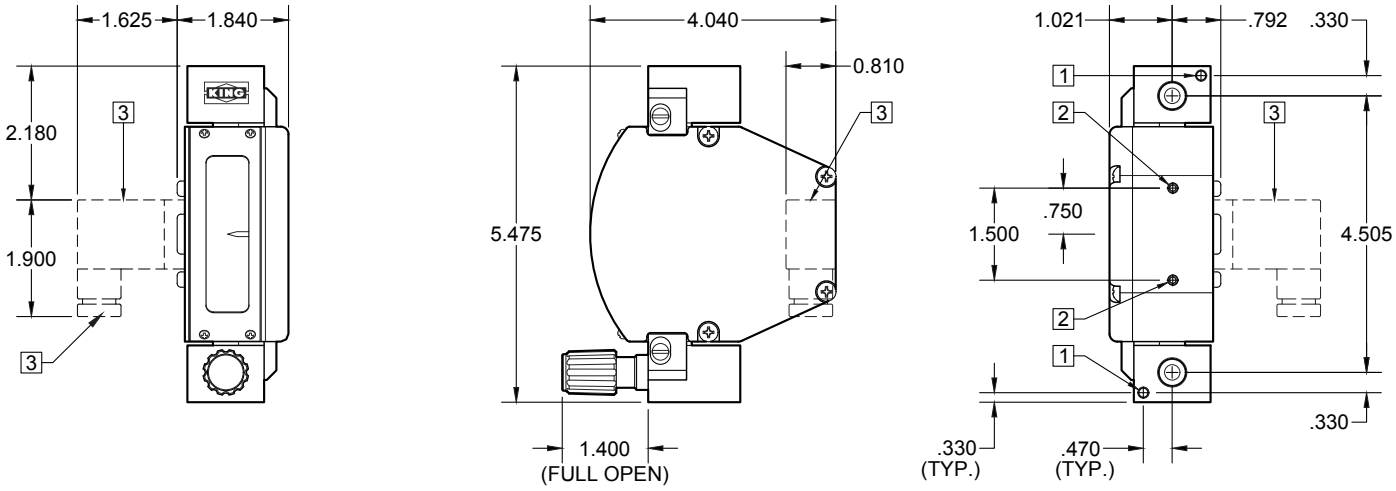

1 10-32 THREADED PANEL MOUNTING HOLES (2 PLACES)

2 10-32 THREADED HOLE FOR OPTIONAL MOUNTING BRACKET (2 PLACES)

3 OPTIONAL ALARM CONNECTION (BACKSIDE OF CASE)

4 FLANGE CONNECTION (½" / 1" - 150# FLANGES / QUICK DISCONNECT OPTIONAL)

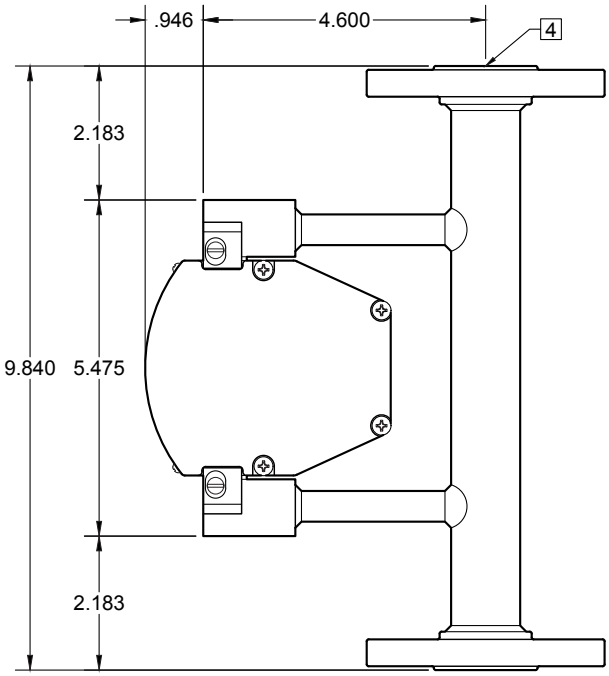

7100 Specifications

SPECIFICATIONS WATER METERING

Order Number	Full Scale Flow Water GPH	Full Scale Flow Water LPH
02W	.6	2.4
04W	1.2	4.5
06W	2.8	10.5
08W	5.5	20
10W	12	45
12W	25	95

SPECIFICATIONS AIR METERING

Order Number	Full Scale Flow Air SCFH	Full Scale Flow Air SLPH
00A*	1.0	28.3
01A	2.5	70
03A	5.4	155
05A	13	360
07A	24	680
09A	55	1550
11A	120	3400

** This meter has a titanium float. A minimum of 4 PSI is required to operate.*

ORDERING:

Use the following guide to determine the specific product number you require.

7	1																														

Meter Series	Material of Construction	O-Ring Material	Scale	Valve	Alarm	Order Number	CRN
Std. Temp. - 710	316L SS, ¼" FNPT - 1	No O-ring** - 0	Millimeter - 1	Inlet 316L SS - 1	No Alarm - 0	See Specs	Non-CRN–
High Temp. - 71H	HST® C-276, ¼" FNPT - 2	EPR - 1	GPH Water - 2	Outlet 316L SS - 2	With Alarm - A	above	Leave Blank
	316L SS, ½" 150# RF* - A	Buna-N - 2	LPH Water - 3	No Valve - 3			CRN Req–
	316L SS, 1" 150# RF* - B	Viton® - 3	SCFH Air@STP - 4	Inlet HST® C-276 - 4			CRN
	316L SS, ½" 300# RF* - C	Kalrez® - 4	SLPH Air@STP - 5	Outlet HST® C-276 - 5			
	316L SS, 1" 300# RF* - D		Non standard - 6				

** Welded*
*** The No O-ring option is for non-valve meters only*

Hastelloy (HST) C-276® is a registered trademark of Haynes International
Viton® is a registered trademark of The Chemours Company
Kalrez® is a registered trademark of the DuPont Company

7200 Series

A real value in general purpose rotameters. Vertical connections are from 3/8" NPT to 2" NPT.

DESCRIPTION

Metering Tube	Machined cast acrylic
Internal Components	316L SS
Fitting Material	PVC (for water service only) 316 SS, brass, aluminum (for water and air service)
Inlet/Outlet Fittings	NPT, vertical
O-Ring	Standard: EPR Optional: Buna-N, Viton

PERFORMANCE

Capacities	Water 1 to 200 GPM Air 4 to 245 SCFM
Scale	127 mm (5") direct reading
Accuracy	± 3% to ± 6% of full scale flow See Specifications table
Turndown	10:1 unless otherwise indicated
Repeatability	1% to 2% See Specifications table
Maximum Temperature	Water 130° F (54° C) Air 100° F (38° C)
Maximum Pressure	Water 150 psig Air 125 psig
Ambient Temperature	33° F to 125° F (1° C to 52° C)

OPTIONS

Certified Calibrations	Conform to ISA RP 16.6
Scales	Any volumetric unit

FLOATS

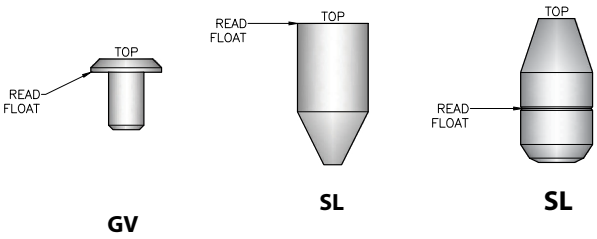

CAUTION: *Meters used in gas service are designed to operate at 14.7 psia. Meters used in pressure gas service must be shielded using 3/8" polycarbonate to protect personnel and equipment in the event of tube failure.*

7200 Specifications

ACRYLIC TUBE

Order Number	Flow GPM Water	Flow SCFM Air	F.S. Accuracy Repeatability	Pressure Drop (Inches of water)	Float Type	Actual Turndown	Connection Size
0051	1	4.3	3%/2%	2.9	GV	10:1	⅜″ FNPT
0052	1	4.3	3%/2%	2.9	GV	10:1	½″ FNPT
0061	2	8	3%/2%	5.2	GV	10:1	⅜″ FNPT
0062	2	8	3%/2%	5.2	GV	10:1	½″ FNPT
0071	3.5	14	3%/2%	9.5	SL	10:1	⅜″ FNPT
0072	3.5	14	3%/2%	9.5	SL	10:1	½″ FNPT
0081	5	20	3%/2%	13.1	SL	10:1	⅜″ FNPT
0082	5	20	3%/2%	13.1	SL	10:1	½″ FNPT
0151	5	20	3%/1%	10	GV	10:1	1″ FNPT
0161	10	43	3%/1%	12	SL	10:1	1″ FNPT
0171	15	62	3%/1%	18	SL	10:1	1″ FNPT
0181	21	86	3%/1%	22	SL	10:1	1″ FNPT
0191	30.5	—	3%/1%	26	SL	10:1	1″ FNPT
0201	40	—	6%/2%	32	SL	10:1	1 ½″ MNPT
0211	50	—	6%/2%	38	SL	10:1	1 ½″ MNPT
0221	40	165	4%/1%	18	SL	10:1	2″ FNPT
0231	60	245	4%/1%	25	SL	10:1	2″ FNPT
0241	80	—	4%/1%	30	SL	10:1	2″ FNPT
0251	100*	—	4%/1%	35	SL	5:1	2″ FNPT
0261	120*	—	6%/2%	45	SL	4:1	2″ FNPT
0271	160*	—	6%/2%	60	SL	3.55:1	2″ FNPT
0281	200*	—	6%/2%	80	SL	3.63:1	2″ FNPT

** These meters have less than 10:1 turndown.*

DIMENSION DIAGRAM

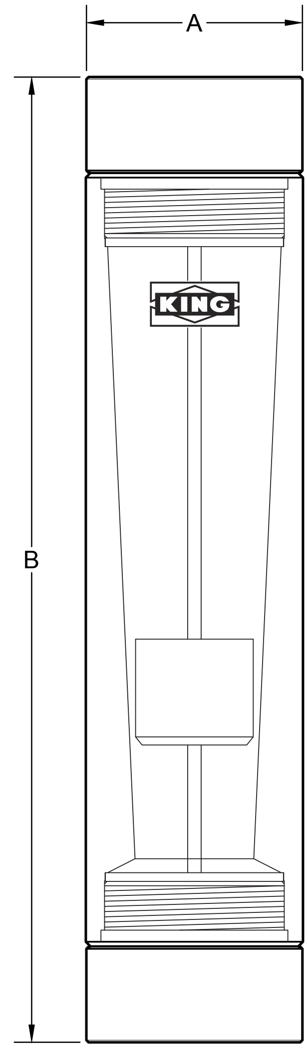

Dimensions (Inches)		
Order Number	Dimensions A	Dimensions B
0051-0082	1.375″	8.25″
0151- 0191	2.000″	10.25″
0201 - 0211	2.000″	12.06″
0221 - 0281	3.000″	13.25″

ACTUAL TURNDOWN:

Order Number	Flow Range	Actual Turndown
0251	20-100 GPM	5:1
0261	30-120 GPM	4:1
0271	45-160 GPM	3.55:1
0281	55-200 GPM	3.63:1

ORDERING:

Use the following guide to determine the specific product number you require.

7 2 0 5	☐☐☐☐	☐	☐	☐	☐
Meter Series	**Order Number**	**Fitting Material**	**O-ring Material**	**Fluid Metered**	**Scale**
	See Specification above	Brass - 1	EPR - 1	GPM – Liquid - W	Standard - Leave Blank
		316L SS - 2	Buna-N - 2	SCFM – Air - A	Non-Standard - N
		PVC* - 3	Viton® - 3		
		Aluminum - 6			

** PVC for water service only*

7310 Series

POLYSULFONE TUBE

An economical 304 stainless steel case with a molded polysulfone metering tube for lighter duty applications where a case enclosed meter is preferred.

DESCRIPTION

Metering Tube	Molded polysulfone
Internal Components	316L SS, Teflon®, PVDF Polysulfone or Hastelloy® C-276
Fitting Material	Standard: 316L SS Optional: PVC, PVDF
Inlet/Outlet Fittings	FNPT, vertical
O-Ring	Standard: Viton® Optional: Buna N, EPR, and Kalrez®
Case and Shield	304 SS case Polycarbonate shield

PERFORMANCE

Capacities	Water (PVDF float) 0.5 GPM Water (Teflon® float) 1 to 100 GPM Water (Metal float) 1.5 to 160 GPM Air 6.1 to 330 SCFM
Scale	127 mm (5") direct reading, detachable
Accuracy	± 3% of full scale flow ± 5% of full scale flow (120 & 150 GPM Metal floats) ± 6% of full scale flow (Teflon® & PVDF floats)
Turndown	10:1
Repeatability	.5% 1% (120 & 150 GPM Metal floats) 1% (Teflon® & PVDF floats)
Maximum Temperature	316L SS fittings 200° F (93° C) PVC fittings 130° F (54° C)
Maximum Pressure	316L SS fittings 200 psig PVC & PVDF fittings (sizes 41 to 72) 150 psig PVC & PVDF fittings (sizes 90 to 103) 125 psig
Ambient Temperature	33° F to 125° F (1° C to 52° C)

OPTIONS

Alarm	Latching Reed Switch (Page 55)
Certified Calibrations	Conform to ISA RP 16.6
Scales	Any volumetric unit

FLOATS

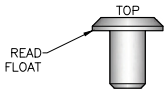

GV

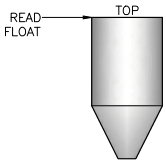

SL

7310 Specifications

DIMENSIONS – WATER & AIR METERING

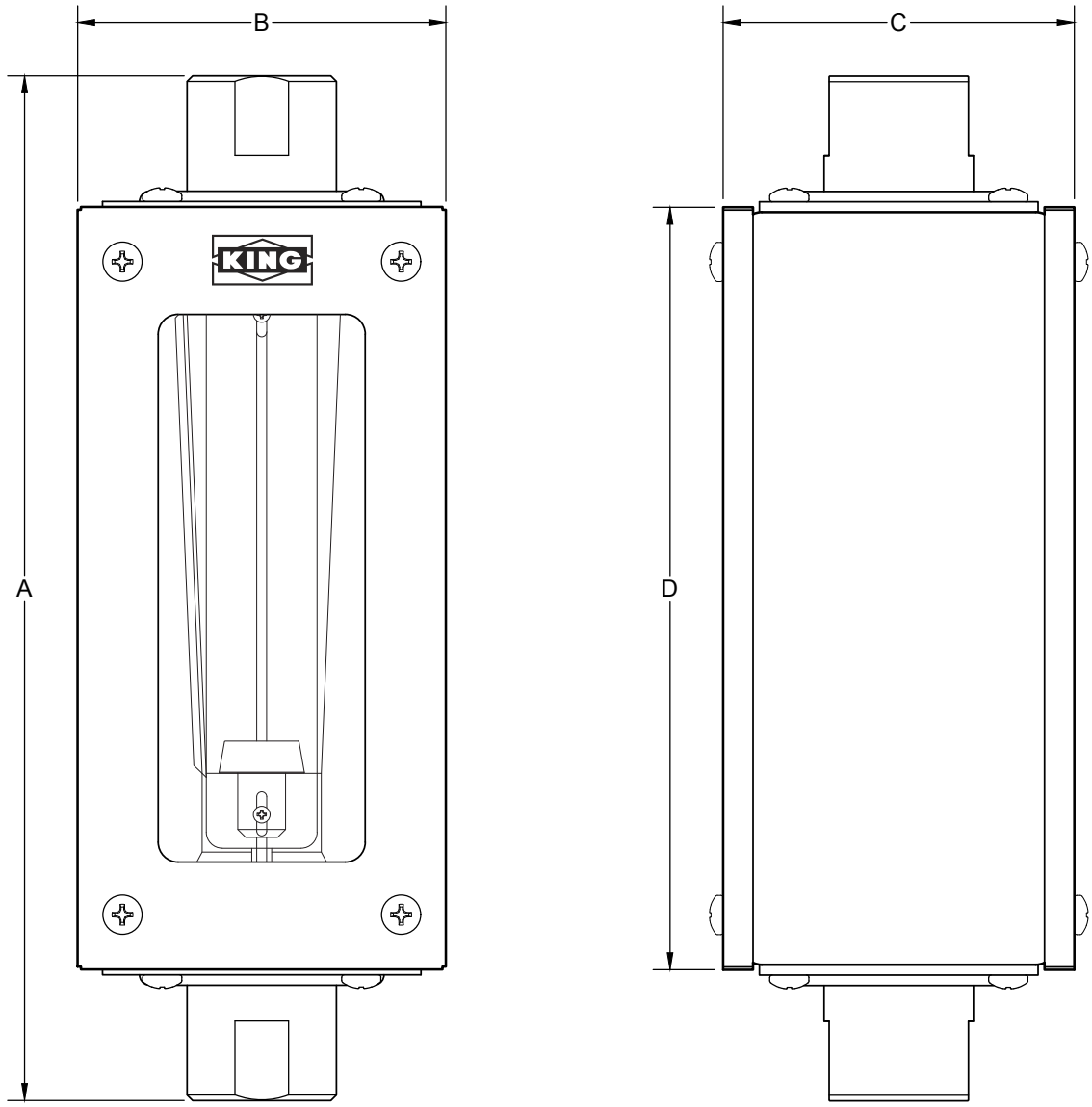

Order Number	Dimensions (Inches)			
	A	B	C	D
41 - 72	12.875	4.625	4.50	9.58
90 - 103	16. 000	6.250	6.25	13.25

7310 Specifications

SPECIFICATIONS – WATER

Order Number	Flow Range Water	Float Material	Float Number	Float Type	Alarm Option	Connect Size FNPT
41	0.5 GPM	PVDF	4-TSL-01	SL	no	½″
42	1 GPM	Teflon®	4-TSL-02	SL	yes	½″
43	1.5 GPM	316L SS	4-SSL-01	SL	yes	½″
44	3 GPM	316L SS	4-SSL-02	SL	yes	½″
45	1.6 GPM	Hastelloy®	4-HSL-01	SL	yes	½″
46	3.2 GPM	Hastelloy®	4-HSL-02	SL	yes	½″
51	2.4 GPM	Teflon®	5-TSL-01	SL	yes	¾″
52	5 GPM	Teflon®	5-TSL-02	SL	yes	¾″
53	6 GPM	316L SS	5-SSL-01	SL	yes	¾″
54	10 GPM	316L SS	5-SSL-02	SL	yes	¾″
55	6.3 GPM	Hastelloy®	5-HSL-01	SL	yes	¾″
56	10.6 GPM	Hastelloy®	5-HSL-02	SL	yes	¾″
61	7.6 GPM	Teflon®	6-TSL-01	SL	yes	1″
62	10 GPM	Teflon®	6-TSL-02	SL	yes	1″
63	15 GPM	Teflon®	6-TSL-03	SL	yes	1″
64	20 GPM	Teflon®	6-TSL-04	SL	yes	1″
65	12 GPM	316L SS	6-GVL-01	GV	yes	1″
66	18 GPM	316L SS	6-SSL-02	SL	yes	1″
67	25 GPM	316L SS	6-SSL-03	SL	yes	1″
68	35 GPM	316L SS	6-SSL-04	SL	yes	1″
69	13 GPM	Hastelloy®	6-HSL-01	SL	yes	1″
70	19 GPM	Hastelloy®	6-HSL-02	SL	yes	1″
71	26.5 GPM	Hastelloy®	6-HSL-03	SL	yes	1″
72	37 GPM	Hastelloy®	6-HSL-04	SL	yes	1″
90	40 GPM	Teflon®	9-TSL-00	SL	yes	2″
91	60 GPM	Teflon®	9-TSL-01	SL	yes	2″
92	80 GPM	Teflon®	9-TSL-02	SL	yes	2″
94	100 GPM	Teflon®	9-TSL-04	SL	yes	2″
99	60 GPM	316L SS	9-SSL-00	SL	yes	2″
95	80 GPM	316L SS	9-SSL-01	SL	yes	2″
96	100 GPM	316L SS	9-SSL-02	SL	yes	2″
97	120 GPM	316L SS	9-SSL-03	SL	yes	2″
98	150 GPM	316L SS	9-SSL-04	SL	yes	2″
100	84 GPM	Hastelloy®	9-HSL-01	SL	yes	2″
101	106 GPM	Hastelloy®	9-HSL-02	SL	yes	2″
102	126 GPM	Hastelloy®	9-HSL-03	SL	yes	2″
103	160 GPM	Hastelloy®	9-HSL-04	SL	yes	2″

SPECIFICATIONS – AIR

Order Number	Flow Range Air	Float Material	Float Number	Float Type	Alarm Option	Connect Size FNPT
43	6.1 SCFM	316L SS	4-SSL-01	SL	yes	½″
44	12.4 SCFM	316L SS	4-SSL-02	SL	yes	½″
53	25 SCFM	316L SS	5-SSL-01	SL	no	¾″
54	41 SCFM	316L SS	5-SSL-02	SL	yes	¾″
65	50 SCFM	316L SS	6-GVL-01	GV	yes	1″
66	76 SCFM	316L SS	6-SSL-02	SL	yes	1″
67	100 SCFM	316L SS	6-SSL-03	SL	yes	1″
99	245 SCFM	316L SS	9-SSL-00	SL	yes	2″
95	330 SCFM	316L SS	9-SSL-01	SL	yes	2″

ORDERING:

Use the following guide to determine the specific product number you require.

7 3 1 1						
Meter Series	**Fitting Material** 316L SS - 2 PVC* - 3 PVDF* - 7	**Float Material** 316L SS - 2 Hastelloy® C-276 - 4 Teflon® - 6 PVDF - 7	**O-ring Material** EPR - 1 Buna-N - 2 Viton® - 3 Kalrez® - 4	**Alarm*** No Alarm - 0 With Alarm - A	**Order Number** See Specification above	**Scale** Water GPM - W Air SCFM - A Non Standard - N

** Not for air service.*

Teflon® is a registered trademark of the Chemours Company

** FLOW RATES MAY VARY FOR METER WITH ALARMS AND TEFLON FLOATS*

7330 Series

Union ends simplify installation and maintenance. With the Teflon® float option these meters are excellent for applications where no metal is preferred. Socket weld end connections available.

DESCRIPTION

Metering Tube	Molded polysulfone
Internal Components	316L SS, Teflon®, PVDF Polysulfone or Hastelloy® C-276
Fitting Material	Standard: PVC Optional: PVDF
Inlet/Outlet Fittings	FNPT, vertical
O-Ring	Standard: Viton® Optional: Buna N, EPR, and Kalrez®

PERFORMANCE

Capacities	Water (PVDF float) 0.5 GPM Water (Teflon® float) 1 to 100 GPM Water (Metal float) 1.5 to 160 GPM
Scale	127 mm (5") direct reading, detachable
Accuracy	± 3% of full scale flow ± 5% of full scale flow (120 & 150 GPM metal floats) ± 6% of full scale flow (Teflon® & PVDF floats)
Turndown	10:1
Repeatability	.5% 1% (120 & 150 GPM Metal floats) 1% (Teflon® & PVDF floats)
Maximum Temperature	PVC fittings 130° F (54° C) PVDF fittings 200° F (93° C)
Maximum Pressure	PVC fittings 150 psig (sizes 41 - 72) PVC fittings 125 psig (size 90 - 103) PVDF fittings 150 psig (sizes 41 - 72) PVDF fittings 125 psig (size 90 - 103)
Ambient Temperature	33° F to 125° F (1° C to 52° C)

OPTIONS

Alarm	Latching Reed Switch (Page 55)
Certified Calibrations	Conform to ISA RP 16.6
Scales	Any volumetric unit

FLOATS

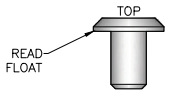

GV

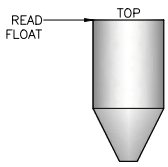

SL

7330 Specifications

POLYSULFONE TUBE

Order Number	Flow Range Water	Float Material	Float Number	Float Type	Alarm Option	Connection Size FNPT
41	.5 GPM	PVDF	4-TSL-01	SL	no	½″
42	1 GPM	Teflon®	4-TSL-02	SL	yes	½″
43	1.5 GPM	316L SS	4-SSL-01	SL	yes	½″
44	3 GPM	316L SS	4-SSL-02	SL	yes	½″
45	1.6 GPM	Hastelloy®	4-HSL-01	SL	yes	½″
46	3.2 GPM	Hastelloy®	4-HSL-02	SL	yes	½″
51	2.4 GPM	Teflon®	5-TSL-01	SL	yes	¾″
52	5 GPM	Teflon®	5-TSL-02	SL	yes	¾″
53	6 GPM	316L SS	5-SSL-01	SL	yes	¾″
54	10 GPM	316L SS	5-SSL-02	SL	yes	¾″
55	6.3 GPM	Hastelloy®	5-HSL-01	SL	yes	¾″
56	10.6 GPM	Hastelloy®	5-HSL-02	SL	yes	¾″
61	7.6 GPM	Teflon ®	6-TSL-01	SL	yes	1″
62	10 GPM	Teflon®	6-TSL-02	SL	yes	1″
63	15 GPM	Teflon®	6-TSL-03	SL	yes	1″
64	20 GPM	Teflon®	6-TSL-04	SL	yes	1″
65	12 GPM	316L SS	6-GVL-01	GV	yes	1″
66	18 GPM	316L SS	6-SSL-02	SL	yes	1″
67	25 GPM	316L SS	6-SSL-03	SL	yes	1″
68	35 GPM	316L SS	6-SSL-04	SL	yes	1″
69	13 GPM	Hastelloy®	6-HSL-01	SL	yes	1″
70	19 GPM	Hastelloy®	6-HSL-02	SL	yes	1″
71	26.5 GPM	Hastelloy®	6-HSL-03	SL	yes	1″
72	37 GPM	Hastelloy®	6-HSL-04	SL	yes	1″
90	40 GPM	Teflon®	9-TSL-00	SL	yes	2″
91	60 GPM	Teflon®	9-TSL-01	SL	yes	2″
92	80 GPM	Teflon®	9-TSL-02	SL	yes	2″
94	100 GPM	Teflon ®	9-TSL-04	SL	yes	2″
99	60 GPM	316L SS	9-SSL-00	SL	yes	2″
95	80 GPM	316L SS	9-SSL-01	SL	yes	2″
96	100 GPM	316L SS	9-SSL-02	SL	yes	2″
97	120 GPM	316L SS	9-SSL-03	SL	yes	2″
98	150 GPM	316L SS	9-SSL-04	SL	yes	2″
100	84 GPM	Hastelloy®	9-HSL-01	SL	yes	2″
101	106 GPM	Hastelloy®	9-HSL-02	SL	yes	2″
102	126 GPM	Hastelloy®	9-HSL-03	SL	yes	2″
103	160 GPM	Hastelloy®	9-HSL-04	SL	yes	2″

DIMENSION DIAGRAM

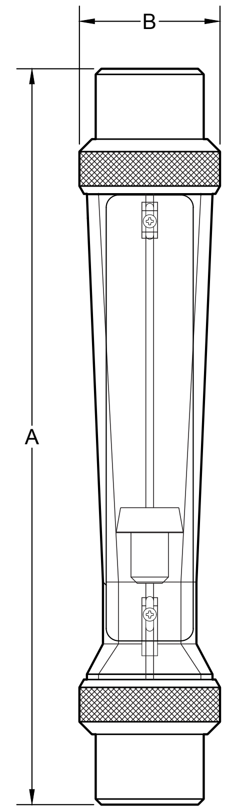

Order Number	Dimensions (Inches) A	B
41 - 46	10.00	1.375
51 - 56	10.00	1.750
61 - 72	11.75	2.250
90 - 103	16.00	3.875

CAUTION:

Polysulfone should not be used in direct sunlight or any other significant sources of UV light.

ORDERING:

Use the following guide to determine the specific product number you require.

7 3 3 1

Meter Series

Fitting Material
PVC* - 3
PVDF* - 7

Float Material
316L SS - 2
Hastelloy® C-276 - 4
Teflon® - 6
PVDF - 7

O-Ring Material
EPR - 1
Buna-N - 2
Viton® - 3
Kalrez® - 4

Alarm*
No Alarm - 0
With Alarm - A

Order Number
See Specification above

Scale
Water GPM - W
Non Standard - N

** Not for air service*

** FLOW RATES MAY VARY FOR METER WITH ALARMS AND TEFLON FLOATS*

7430 Series

Both 65 mm and 150 mm scales, borosilicate glass tube models feature all stainless steel frame and horizontal connections at a less expensive price than competitive products. Valve optional.

DESCRIPTION

Metering Tube	Borosilicate Kinglass
Internal Components	316L SS, black glass, sapphire, Carboloy, tantalum
Fitting Material	316L SS Optional: PVC, PVDF, Hastelloy®
Inlet/Outlet Fittings	⅛" and ¼" FNPT, horizontal Control valve optional
O-Ring	Standard: Viton® Optional: Buna N, EPR, Kalrez®

PERFORMANCE

Capacities	Water 0.56 to 1,800 cc/min Air 54 to 70,000 cc/min
Scale	65 mm, 150 mm direct reading, detachable
Accuracy	± 6% of full scale flow, 65 mm ± 4% of full scale flow, 150 mm
Turndown	10:1
Repeatability	1%
Max Temperature	316L SS / Hastelloy fittings Gases 250° F (121° C) 316L SS / Hastelloy fittings Liquids 200° F (93° C) PVC fittings Gases & Liquids 110° F (43° C) PVDF fittings Gases & Liquids 200° F (93° C)
Maximum Pressure	316L SS fittings 200 psig Hastelloy 200 psig PVC fittings 130 psig PVDF fittings 150 psig
Ambient Temperature	33° F to 125° F (1° C to 52° C)

OPTIONS

Alarm	Fiber-Optic or Inductive Ring Sensor (Page 59)
Certified Calibrations	Conform to ISA RP 16.6
Scales	Any volumetric unit
High Temp.	Ambient 250° F

FLOAT

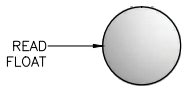

BL

7430 Specifications

DIMENSION DIAGRAM 65MM

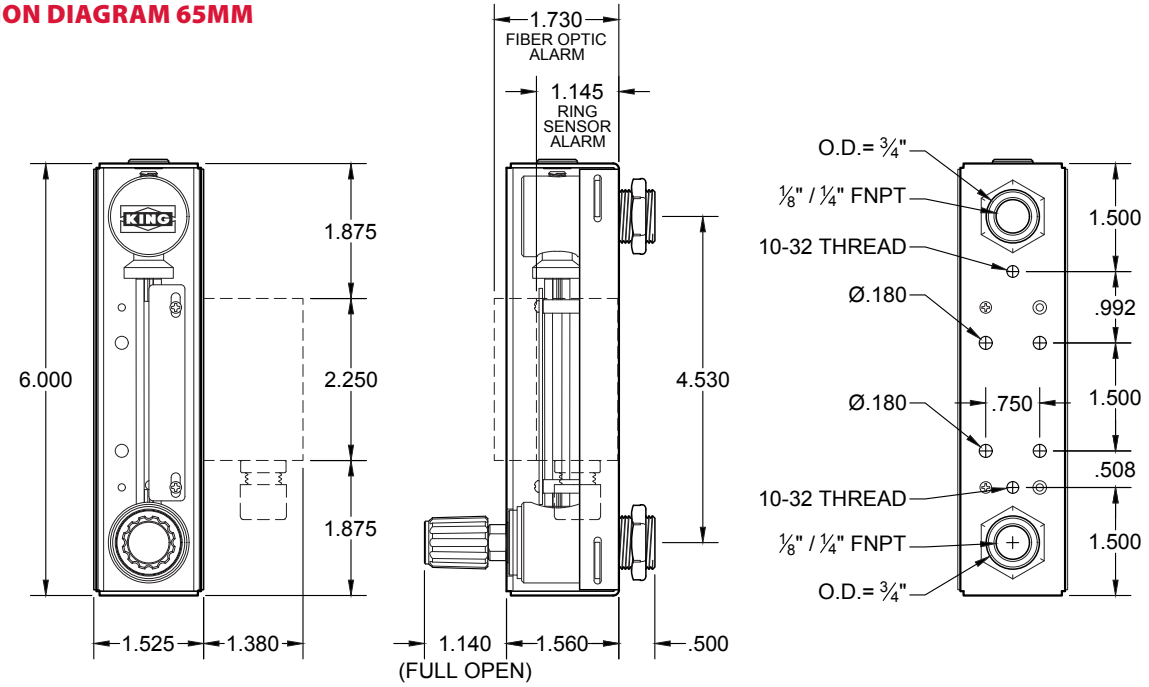

DIMENSION DIAGRAM 150MM

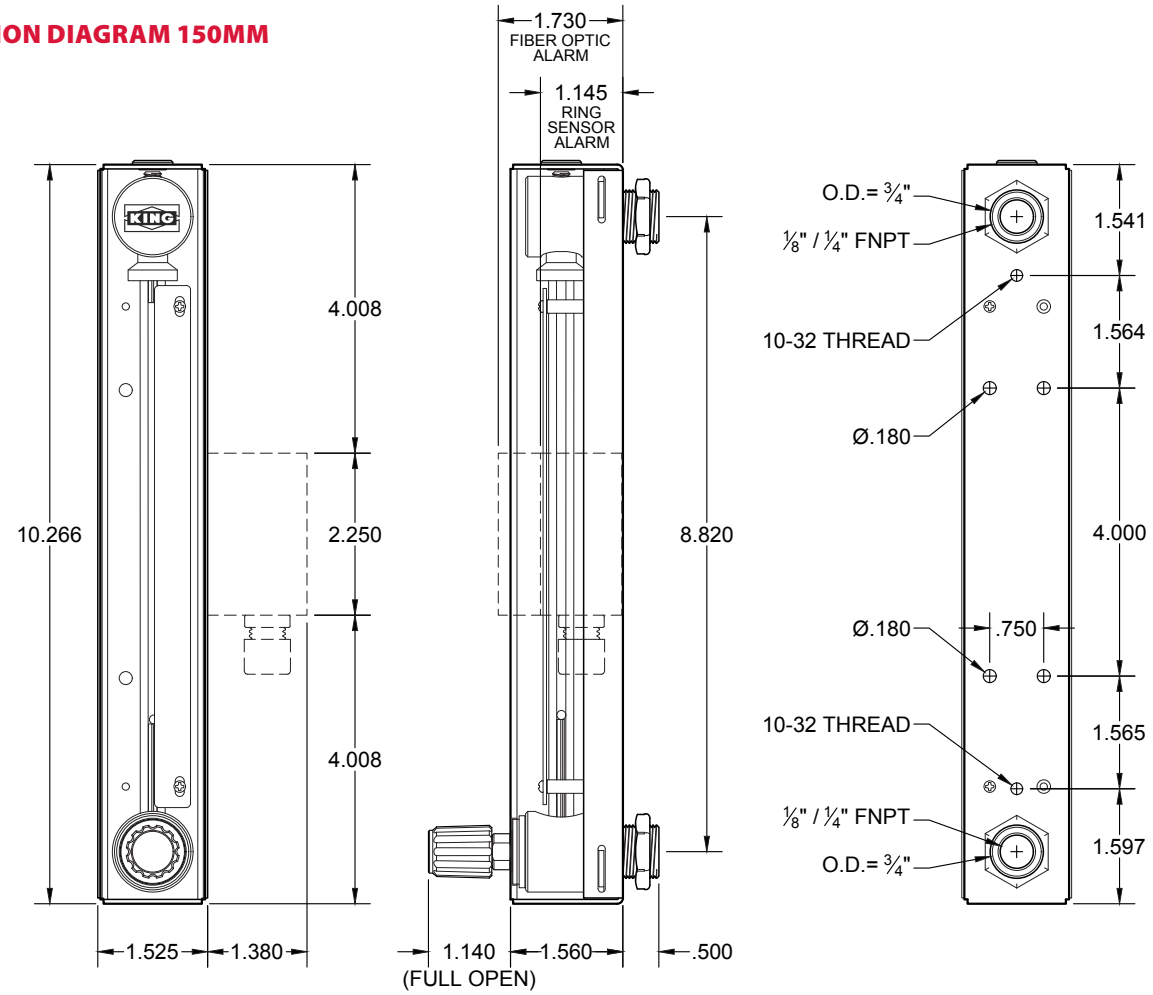

7430 Specifications

65MM Scale Flow Ranges							
Tube Number	Float Material	Air (STP)			Water (70° F)		
		CC/MIN	SCFH	SLPH	CC/MIN	GPH	LPH
1-02-G-021	Glass	66	.14	4.0	0.72	.011	.042
	Sapphire	105	.22	6.2	1.3	.021	.078
	Stainless Steel	200	.42	12.0	3.3	.052	.190
	Carboloy	340	.70	20.0	7.0	.110	.420
	Tantalum	350	.74	21.0	7.8	.125	.460
1-03-G-041	Glass	76	.16	4.6	1.15	.018	.068
	Sapphire	120	.25	7.2	2.10	.032	.125
	Stainless Steel	230	.50	14.0	4.20	.068	.260
	Carboloy	400	.85	24.0	9.00	.145	.560
	Tantalum	440	.90	26.0	10.00	.165	.620
1-08-G-061	Glass	525	1.1	31	9.0	.14	.54
	Sapphire	700	1.5	42	15.5	.24	.95
	Stainless Steel	1130	2.4	68	29.0	.46	1.70
	Carboloy	1600	3.4	95	46.0	.72	2.80
	Tantalum	1700	3.6	100	50.0	.78	3.00
1-23-G-081	Glass	2000	4.4	120	44	.70	2.6
	Sapphire	2600	5.4	150	68	1.05	4.0
	Stainless Steel	3800	8.2	230	110	1.70	6.6
	Carboloy	5600	12.0	340	170	2.70	10.5
	Tantalum	6000	13.0	360	180	2.90	11.0
2-14-G-021	Glass	6800	14.5	400	160	2.6	9.5
	Sapphire	9200	19.5	540	240	3.8	14.5
	Stainless Steel	13000	28.0	800	400	6.2	24.0
	Carboloy	19000	40.0	1100	600	9.5	36.0
	Tantalum	20000	42.0	1200	640	10.0	38.0
2-34-G-041	Glass	19000	40.0	1150	520	8.25	31.0
	Sapphire	25000	52.0	1500	740	11.50	44.0
	Stainless Steel	42500	90.0	2550	1200	19.00	72.0
	Carboloy	60000	125.0	3600	1700	27.00	105.0
	Tantalum	70000	145.0	4200	1800	29.00	110.0

150 MM Scale Flow Ranges							
Tube Number	Float Material	Air (STP)			Water (70° F)		
		CC/MIN	SCFH	SLPH	CC/MIN	GPH	LPH
1-03-G-022	Glass	54	.114	3.2	.56	.0088	.033
	Sapphire	82	.175	4.9	1.04	.0160	.062
	Stainless Steel	160	.340	9.8	2.25	.0350	.135
	Carboloy	280	.580	16.5	5.00	.0780	.300
	Tantalum	300	.620	17.5	5.20	.0840	.320
1-04-G-042	Glass	106	.225	6.4	1.24	.0195	.074
	Sapphire	165	.35	10.0	2.35	.0380	.145
	Stainless Steel	320	.68	19.0	5.60	.0900	.340
	Carboloy	540	1.14	32.0	12.4	.1950	.740
	Tantalum	580	1.24	35.0	13.5	.2100	.820
1-07-G-062	Glass	350	.74	21.0	4.7	.074	.28
	Sapphire	500	1.06	30.0	10.0	.160	.60
	Stainless Steel	820	1.75	50.0	20.5	.330	1.25
	Carboloy	1250	2.60	76.0	34.0	.540	2.05
	Tantalum	1350	2.90	80.0	36.0	.560	2.15
1-11-G-082	Glass	850	1.8	50.0	16.5	.26	1.0
	Sapphire	1100	2.3	66.0	27.0	.42	1.6
	Stainless Steel	1600	3.4	100.0	46.0	.72	2.7
	Carboloy	2300	4.9	140.0	72.0	1.15	4.4
	Tantalum	2450	5.2	155.0	80.0	1.25	4.8
1-27-G-102	Glass	2150	4.6	130.0	52	.84	3.1
	Sapphire	2800	6.0	170.0	78	1.24	4.7
	Stainless Steel	4400	9.2	260.0	130	2.05	7.8
	Carboloy	6200	13.5	380.0	205	3.20	12.3
	Tantalum	6750	14.0	400.0	210	3.30	12.6
2-09-G-002	Glass	3800	8.2	230.0	86	1.35	5.2
	Sapphire	5000	10.6	300.0	130	2.05	7.8
	Stainless Steel	7500	16.0	450.0	220	3.40	13.0
	Carboloy	10600	22.5	640.0	330	5.20	20.0
	Tantalum	11500	24.0	680.0	360	5.60	21.5
2-17-G-022	Glass	9000	19.0	540.0	215	3.40	13.0
	Sapphire	11400	24.5	700.0	320	5.00	19.0
	Stainless Steel	17000	36.0	1000.0	520	8.20	31.0
	Carboloy	24000	50.0	1450.0	760	12.2	46.0
	Tantalum	25000	54.0	1500.0	820	13.0	49.0
2-32-G-042	Glass	20500	43.0	1220.0	470	7.5	28.0
	Sapphire	26000	56.0	1550.0	700	11.0	42.0
	Stainless Steel	38000	82.0	2300.0	1120	18.0	68.0
	Carboloy	54000	116.0	3300.0	1650	26.0	100.0
	Tantalum	60000	125.0	3500.0	1750	28.0	106.0

ORDERING:

Use the following guide to determine the specific product number you require for the 65mm or the 150mm flowmeter.

7	4																		

Meter Series	Tube Number	Float	Fitting Material	O-Ring	Scale	Valve	Alarm Switch
Std. Temp - 74 C	See Specifications above	Glass - 1	316L SS - ⅛" F NPT - 1	EPR - 1	Millimeter - 1	316L SS - Inlet - 1	Without Alarm - 0
High Temp - 74 K		Sapphire - 2	316L SS - ¼" FNPT - 2	Buna-N - 2	GPH Water@70°F - 2	316L SS - Outlet - 2	Fiber-Optic NPN (Proximity) - 1 [1]
		316 SS - 3	PVC - ¼" FNPT - 3	Viton® - 3	LPH Water@70°F - 3	No Valve - 3	Fiber-Optic PNP (Proximity) - 2 [1]
		Carboloy - 4	PVC - ⅛" FNPT - 4	Kalrez® No Valve - 4	CC/MIN Water@STP - 4	PVC - Inlet - 4	Inductive Ring Sensor (Proximity) - 3 [2]
		Tantalum - 5	PVDF - ¼" FNPT - 5	Kalrez® Valve - 5	SCFH Air@STP - 5	PVC - Outlet - 5	Inductive Ring Sensor (Latching) - 4 [2]
			PVDF - ⅛" FNPT - 6		SLPH Air@STP - 6	PVDF - Inlet - 6	
			Hastelloy® C -¼" FNPT - 7		SCC/MIN Air@STP - 7	PVDF - Outlet - 7	
			Hastelloy® C -⅛" FNPT - 8		Non standard - 8	Hastelloy® C - Inlet - 8	
					Dual Scale - 9	Hastelloy® C - Outlet - 9	

[1] Fiber Optic switch is not available for sapphire floats

[2] Inductive Ring Sensor is available in the following:
1/8" Floats - Stainless Steel / Carboloy
1/4" Floats - Stainless Steel / Carboloy / Tantalum

7440 Series

Based on our proven, panel-mountable 7430, we offer the vertically-connected 7440 with the same scale lengths, flow rates, and cost-effective performance for low-flow applications such as purge metering and chemical dosing.

DESCRIPTION

Metering Tube	Borosilicate Kinglass
Internal Components	316L stainless steel, black glass, sapphire, Carboloy, tantalum
Fitting Material	316L SS Optional: PVDF
Inlet/Outlet Fittings	1/4" FNPT, vertical
O-Ring	Standard: Viton® Optional: Buna N, EPR, Kalrez®

PERFORMANCE

Capacities	Water 0.56 to 1,800 cc/min Air 54 to 70,000 cc/min
Scale	65 mm, 150 mm direct reading, detachable
Accuracy	± 6% of full scale flow, 65 mm ± 4% of full scale flow, 150 mm
Turndown	10:1
Repeatability	1%
Max Temperature	316L SS fittings Gases 250° F (121° C) 316L SS fittings Liquids 200° F (93° C) PVDF fittings Gases & Liquids 200° F (93° C)
Maximum Pressure	316L SS fittings 200 psig PVDF fittings 150 psig
Ambient Temperature	33° F to 125° F (1° C to 52° C)

OPTIONS

Alarms	Fiber-Optic (Page 60) Inductive Ring Sensor (Page 59)
Certified Calibrations	Conform to ISA RP 16.6
Scales	Any volumetric unit
High Temp	Ambient 250° F

FLOAT

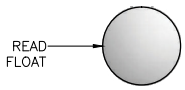

BL

7440 Specifications

DIMENSION DIAGRAM 65MM

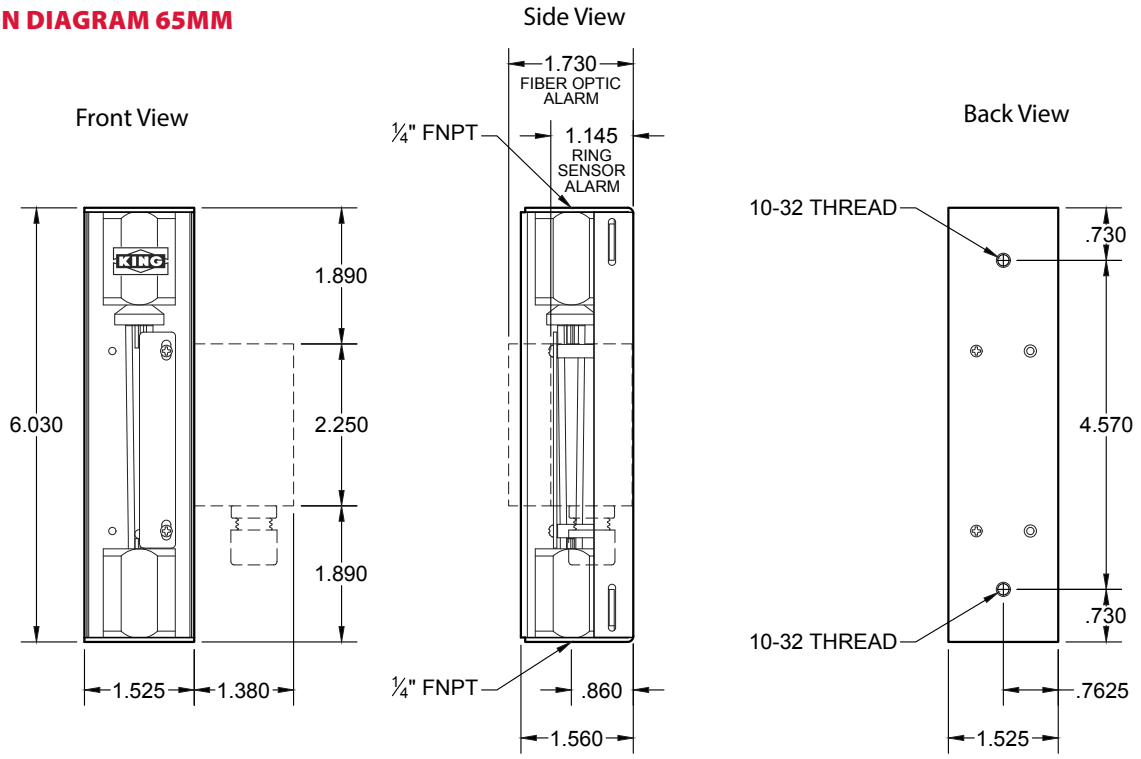

DIMENSION DIAGRAM 150MM

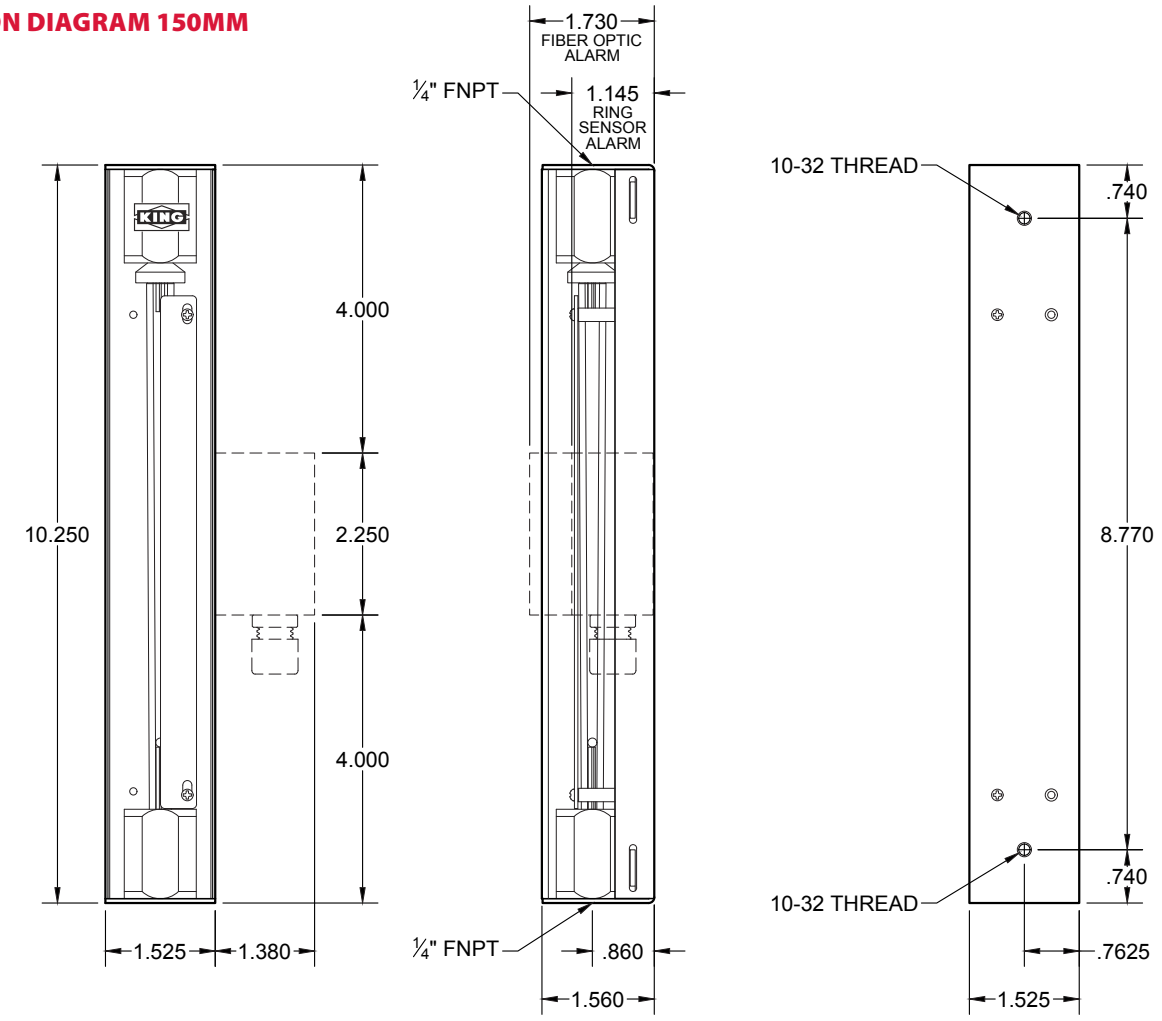

1/4" FNPT Vertical Connections

7440 Specifications

65MM Scale Flow Ranges							
Tube Number	Float Material	Air (STP)			Water (70° F)		
		CC/MIN	SCFH	SLPH	CC/MIN	GPH	LPH
1-02-G-021	Glass	66	.14	4.0	0.72	.011	.042
	Sapphire	105	.22	6.2	1.3	.021	.078
	Stainless Steel	200	.42	12.0	3.3	.052	.190
	Carboloy	340	.70	20.0	7.0	.110	.420
	Tantalum	350	.74	21.0	7.8	.125	.460
1-03-G-041	Glass	76	.16	4.6	1.15	.018	.068
	Sapphire	120	.25	7.2	2.10	.032	.125
	Stainless Steel	230	.50	14.0	4.20	.068	.260
	Carboloy	400	.85	24.0	9.00	.145	.560
	Tantalum	440	.90	26.0	10.00	.165	.620
1-08-G-061	Glass	525	1.1	31	9.0	.14	.54
	Sapphire	700	1.5	42	15.5	.24	.95
	Stainless Steel	1130	2.4	68	29.0	.46	1.70
	Carboloy	1600	3.4	95	46.0	.72	2.80
	Tantalum	1700	3.6	100	50.0	.78	3.00
1-23-G-081	Glass	2000	4.4	120	44	.70	2.6
	Sapphire	2600	5.4	150	68	1.05	4.0
	Stainless Steel	3800	8.2	230	110	1.70	6.6
	Carboloy	5600	12.0	340	170	2.70	10.5
	Tantalum	6000	13.0	360	180	2.90	11
2-14-G-021	Glass	6800	14.5	400	160	2.6	9.5
	Sapphire	9200	19.5	540	240	3.8	14
	Stainless Steel	13000	28.0	800	400	6.2	24
	Carboloy	19000	40.0	1100	600	9.5	36
	Tantalum	20000	42.0	1200	640	10.0	38
2-34-G-041	Glass	19000	40.0	1150	520	8.25	31
	Sapphire	25000	52.0	1500	740	11.50	44
	Stainless Steel	42500	90.0	2550	1200	19.00	72
	Carboloy	60000	125.0	3600	1700	27.00	105
	Tantalum	70000	145.0	4200	1800	29.00	110

150 MM Scale Flow Ranges							
Tube Number	Float Material	Air (STP)			Water (70° F)		
		CC/MIN	SCFH	SLPH	CC/MIN	GPH	LPH
1-03-G-022	Glass	54	.114	3.2	.56	.0088	.033
	Sapphire	82	.175	4.9	1.04	.0160	.062
	Stainless Steel	160	.340	9.8	2.25	.0350	.135
	Carboloy	280	.580	16.5	5.00	.0780	.300
	Tantalum	300	.620	17.5	5.20	.0840	.320
1-04-G-042	Glass	106	.225	6.4	1.24	.0195	.074
	Sapphire	165	.35	10.0	2.35	.0380	.145
	Stainless Steel	320	.68	19.0	5.60	.0900	.340
	Carboloy	540	1.14	32.0	12.4	.1950	.740
	Tantalum	580	1.24	35.0	13.5	.2100	.820
1-07-G-062	Glass	350	.74	21.0	4.7	.074	.28
	Sapphire	500	1.06	30.0	10.0	.160	.60
	Stainless Steel	820	1.75	50.0	20.5	.330	1.25
	Carboloy	1250	2.60	76.0	34.0	.540	2.05
	Tantalum	1350	2.90	80.0	36.0	.560	2.15
1-11-G-082	Glass	850	1.8	50	16.5	.26	1.0
	Sapphire	1100	2.3	66	27.0	.42	1.6
	Stainless Steel	1600	3.4	100	46.0	.72	2.7
	Carboloy	2300	4.9	140	72.0	1.15	4.4
	Tantalum	2450	5.2	155	80.0	1.25	4.8
1-27-G-102	Glass	2150	4.6	130	52	.84	3.1
	Sapphire	2800	6.0	170	78	1.24	4.7
	Stainless Steel	4400	9.2	260	130	2.05	7.8
	Carboloy	6200	13.5	380	205	3.20	12.5
	Tantalum	6750	14.0	400	210	3.30	12.5
2-09-G-002	Glass	3800	8.2	230	86	1.35	5.2
	Sapphire	5000	10.6	300	130	2.05	7.8
	Stainless Steel	7500	16.0	450	220	3.40	13.0
	Carboloy	10600	22.5	640	330	5.20	20.0
	Tantalum	11500	24.0	680	360	5.60	21.5
2-17-G-022	Glass	9000	19.0	540	215	3.40	13.0
	Sapphire	11400	24.5	700	320	5.00	19.0
	Stainless Steel	17000	36.0	1000	520	8.20	31.0
	Carboloy	24000	50.0	1450	760	12.2	46.0
	Tantalum	25000	54.0	1500	820	13.0	49.0
2-32-G-042	Glass	20500	43.0	122	470	7.5	28.0
	Sapphire	26000	56.0	1550	700	11.0	42.0
	Stainless Steel	38000	82.0	2300	1120	18.0	68.0
	Carboloy	54000	116.0	3300	1650	26.0	100.0
	Tantalum	60000	125.0	3500	1750	28.0	106.0

ORDERING:

Use the following guide to determine the specific product number you require for the 65mm or the 150mm flowmeter.

7 4 _	_ _ _ _ _ _ _	_	_	_	_	_
Meter Series	**Tube Number**	**Float Material**	**Fitting Material**	**O-Ring Material**	**Scale**	**Alarm Switch**
Std. Temp - 74 V	See Specifications	Glass - 1	316L SS - ¼" FNPT - 1	EPR - 1	Millimeter - 1	Without Alarm - 0
High Temp - 74 K	above	Sapphire - 2	PVDF - ¼" FNPT - 2	Buna-N - 2	GPH Water@70°F - 2	Fiber-Optic NPN (Proximity) - 1 (1)
		316 SS - 3		Viton® - 3	LPH Water@70°F - 3	Fiber-Optic PNP (Proximity) - 2 (1)
		Carboloy - 4		Kalrez® - 4	CC/MIN Water@STP - 4	Inductive Ring Sensor (Proximity) - 3 (2)
		Tantalum - 5			SCFH Air@STP - 5	Inductive Ring Sensor (Latching) - 4 (2)
					SLPH Air@STP - 6	
					SCC/MIN Air@STP - 7	
					Non standard - 8	
					Dual Scale - 9	

(1) Fiber Optic switch is not available for sapphire floats
(2) Inductive Ring Sensor is available in the following:
1/8" Floats - Stainless Steel / Carboloy
1/4" Floats - Stainless Steel / Carboloy / Tantalum

7450 Series

Side plate style meters with 75 mm or 150 mm borosilicate glass tube and 316L stainless steel or brass connections. Valves optional. Available with Hastelloy®C-276 construction for greater chemical resistance.

DESCRIPTION	
Metering Tube	Borosilicate Kinglass®
Internal Components	316L SS
Fitting Material	Brass or 316L SS
Inlet/Outlet Fittings	FNPT, horizontal Control valve optional
O-Ring	Standard: Viton Optional: Buna N, EPR, and Kalrez®

PERFORMANCE	
Capacities	Water 0.48 to 7.4 GPM Air 2 to 20 SCFM
Scale	75 mm (3”), 150 mm (6”) direct reading, detachable
Accuracy	± 5% of full scale flow, 75 mm ± 3% of full scale flow, 150 mm
Turndown	10:1
Repeatability	1%
Maximum Temperature	Liquid 200° F (93° C) Gases 250° F (121° C)
Maximum Pressure	200 psig
Ambient Temperature	33° F to 125° F (1° C to 52° C)

OPTIONS	
Certified Calibrations	Conform to ISA RP 16.6
Scales	Any volumetric unit

FLOATS

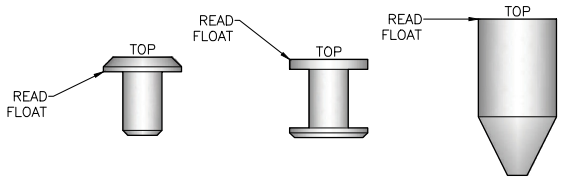

GV **LP** **SL**

7450 Specifications

75mm (3") Scale Models								
	Full Scale Flow							
	Water		Air					
Order Number	GPM	LPM	SCFM	SLPM	Float Number	Float Type	Tube Size	Tube Number*
3G1	.48	1.8	2.0	56	½-LPG-04	LP	.50"	½-24-G-3
3G2	1.0	3.8	4.0	112	½-LPG-05	LP	.50"	½-24-G-3
3G3	2.0	7.6	8.2	230	½-SLG-01	SL	.50"	½-24-G-3
3P1	2.5	9.4	10.0	280	⅝-GVP-01	GV	.625"	⅝-29-P-3
3P2	4.0	15.0	20.0	560	⅝-SLP-01	SL	.625"	⅝-29-P-3
3P3	5.6	21.0	—	—	⅝-SLP-02	SL	.625"	⅝-29-P-3
3P4	7.4	28.0	—	—	⅝-SLP-03	SL	.625"	⅝-29-P-3

150mm (6") Scale Models								
	Full Scale Flow							
	Water		Air					
Order Number	GPM	LPM	SCFM	SLPM	Float Number	Float Type	Tube Size	Tube Number*
6G1	0.5	1.9	2.0	57	½-LPG-04	LP	.50"	½-24-G-6
6G2	1.0	3.8	4.2	118	½-LPG-05	LP	.50"	½-24-G-6
6G3	2.0	7.6	8.2	230	½-SLG-01	SL	.50"	½-24-G-6
6P1	2.5	9.4	10.0	280	⅝-GVP-02	GV	.625"	⅝-32-P-6
6P2	4.0	15.0	20.0	560	⅝-SLP-04	SL	.625"	⅝-32-P-6
6P3	5.6	21.0	—	—	⅝-SLP-05	SL	.625"	⅝-32-P-6
6P4	7.4	28.0	—	—	⅝-SLP-06	SL	.625"	⅝-32-P-6

** Tubes designated "G" have rib-guided floats.*
Tubes designated "P" have pole-guided floats.

Order Number	Dimensions (Inches)					End Fitting	
	A	B	C	D	E	F	G
75mm (3") Scale Models							
3G1 -3P4	1.75	1.50	8.00	7.00	2.25	.974	⌀1.00
150mm (6") Scale Models							
6G1- 6P4	1.75	1.50	11.57	10.57	2.25	.974	⌀1.00

DIMENSION DIAGRAMS

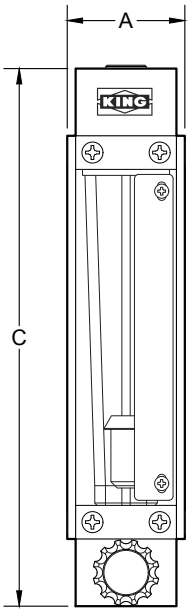

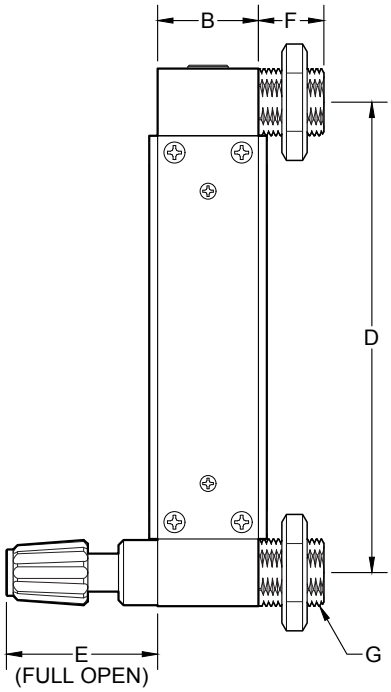

ORDERING:

Use the following guide to determine the specific product number you require.

7	4	5															
Meter Series			**Order Number**			**Fitting Material**		**O-Ring Material**		**Scale**		**Valve**	
			See Specifications			Brass - ⅜" FNPT - 1		EPR - 1		Millimeter - 1		Brass - Inlet - 1	
						316L SS - ⅜" FNPT - 2		Buna-N - 2		GPM Water@70°F - 2		Brass - Outlet - 2	
								Viton® - 3		LPM Water@70°F - 3		No Valve - 3	
								Kalrez® - No Valve - 4		SCFM Air@STP - 4		316L SS - Inlet - 4	
								Kalrez® - Valve - 5		SLPM Air@STP - 5		316L SS - Outlet - 5	
										Non standard - 6			
										Dual Scale - 9			

7459 Series

Expanding the line of side plate construction rotameters is the 7459 Series. These models feature a 250 mm scale borosilicate glass tube with aluminum side plates and a polycarbonate shield. Connections are vertical FNPT, 316L stainless steel.

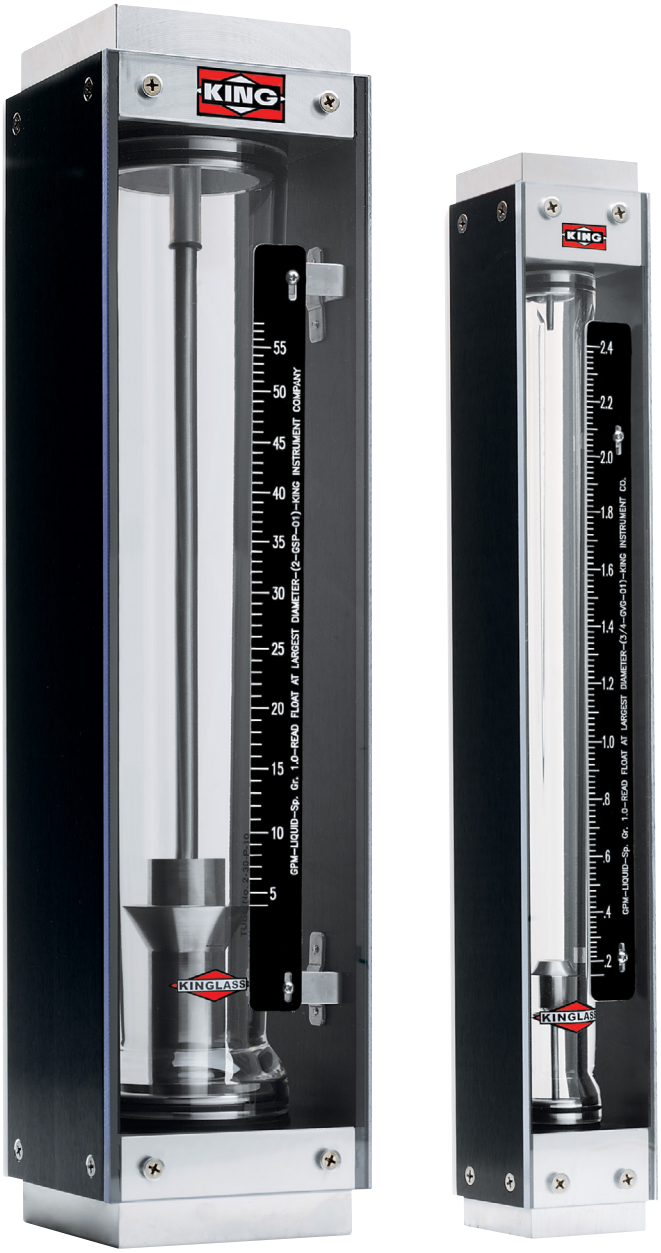

DESCRIPTION

Metering Tube	Borosilicate Kinglass®
Internal Components	Standard: 316L SS
Fitting Material	Standard: 316L SS
Inlet/Outlet Fittings	NPT, vertical connection: Sizes 3 & 4: ½" FNPT Size 5: ¾" FNPT Size 6: 1" FNPT Size 8 & 9: 1 ½" FNPT
O-Ring	Standard: Viton® Optional: Buna N, EPR, Kalrez®

PERFORMANCE

Capacities	Water 0.22 to 100 GPM Air 0.9 to 350 SCFM
Scale	250 mm (10") direct reading, detachable
Accuracy	± 2% of full scale flow
Turndown	10:1
Repeatability	0.5%
Max Temperature	Gases 250° F (121° C) Liquids 200° F (93° C)
Maximum Pressure	Sizes 3 & 4: 350 psig Size 5: 175 psig Size 6, 8 & 9: 125 psig
Ambient Temperature	33° F to 125° F (1° C to 52° C)

OPTIONS

Certified Calibrations	Conform to ISA RP 16.6
Scales	Any volumetric unit

FLOATS

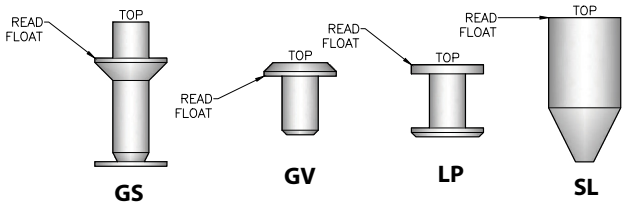

7459 Specifications

Order No.	Full Scale Flow GPM - Water	Order No.	Full Scale Flow SCFM - Air	Float No.	Float Type	Pressure Drop (Inches of Water)	Tube Size*	Tube No.	Connect. Size FNPT
31W	0.220	31A	.9	⅜-LPG-01	LP	—	⅜-20-G-10	3G	½″
32W	0.315	32A	1.4	⅜-SLG-01	SL	2	⅜-20-G-10	3G	½″
33W	0.640	33A	2.7	⅜-SLG-02	SL	7	⅜-20-G-10	3G	½″
41W	0.77	41A	3.4	½-LPG-01	LP	6	½-32-G-10	4G	½″
42W	1.02	42A	4.4	½-LPG-02	LP	10	½-32-G-10	4G	½″
43W	1.20	43A	5.0	½-GVG-01	GV	10	½-32-G-10	4G	½″
44W	1.44	44A	6.1	½-GSG-01	GS	15	½-32-G-10	4G	½″
45W	1.92	45A	8.5	½-SLG-01	SL	28	½-32-G-10	4G	½″
46W	2.26	46A	10.2	½-SLG-02	SL	41	½-32-G-10	4G	½″
51W	1.1	51A	4.5	¾-LPG-01	LP	1	¾-28-G-10	5G	¾″
52W	2.4	52A	10.0	¾-GVG-01	GV	4	¾-28-G-10	5G	¾″
53W	3.0	53A	12.0	¾-GSG-01	GS	5	¾-28-G-10	5G	¾″
54W	3.3	54A	13.2	¾-GVG-02	GV	6	¾-28-G-10	5G	¾″
55W	4.0	55A	16.4	¾-GSG-02	GS	6	¾-28-G-10	5G	¾″
56W	5.2	56A	22.0	¾-SLG-01	SL	18	¾-28-G-10	5G	¾″
61W	6.9	—	—	1-LPG-02	LP	4	1-32-G-10	6G	1″
62W	9.8	—	—	1-SLG-01	SL	8	1-32-G-10	6G	1″
63W	12.6	—	—	1-SLG-02	SL	13	1-32-G-10	6G	1″
64W	6.7	64A	27.0	1-LPP-01	LP	4	1-40-P-10	6P	1″
65W	7.4	65A	30.0	1-GVP-01	GV	6	1-40-P-10	6P	1″
66W	8.5	66A	35.0	1-GVP-02	GV	8	1-40-P-10	6P	1″
67W	10.4	67A	42.5	1-GSP-01	GS	10	1-40-P-10	6P	1″
68W	11.6	68A	46.5	1-GVP-03	GV	15	1-40-P-10	6P	1″
69W	12.0	69A	50.0	1-GSP-02	GS	14	1-40-P-10	6P	1″
610W	15.6	610A	63.0	1-GSP-03	GS	24	1-40-P10	6P	1″
611W	21.6	611A	100.0	1-SLP-01	SL	61	1-40-P10	6P	1″
612W	27.5	—	—	1-SLP-02	SL	85	1-40-P10	6P	1″
613W	34.5	—	—	1-SLP-03	SL	110	1-40-P10	6P	1″
84W	17.0	84A	70.0	1½-GVP-01	GV	10	8P - 1½-32-P-10	8P	1 ½″
85W	21.2	85A	87.0	1½-GVP-02	GV	13	8P - 1½-32-P-10	8P	1 ½²″
86W	22.2	—	—	1½-GSP-01	GS	14	8P - 1½-32-P-10	8P	1 ½″
87W	24.8	87A	102.0	1½-GVP-03	GV	18	8P - 1½-32-P-10	8P	1 ½″
88W	28.5	—	—	1½-GSP-02	GS	20	8P - 1½-32-P-10	8P	1 ½″
89W	35.0	—	—	1½-GSP-03	GS	24	8P - 1½-32-P-10	8P	1½″
94W	41.5	94A	170.0	2-GVP-01	GV	20	9P - 2-30-P-10	9P	1 ½″
95W	58.0	95A	240.0	2-GSP-01	GS	25	9P - 2-30-P-10	9P	1½″
96W	65.0	96A	270.0	2-GSP-02	GS	30	9P - 2-30-P-10	9P	1½″
97W	85.0	97A	350.0	2-SLP-00	SL	40	9P - 2-30-P-10	9P	1 ½″
98W	100.0	—	—	2-SLP-01	SL	50	9P - 2-30-P-10	9P	1 ½″

DIMENSION DIAGRAMS

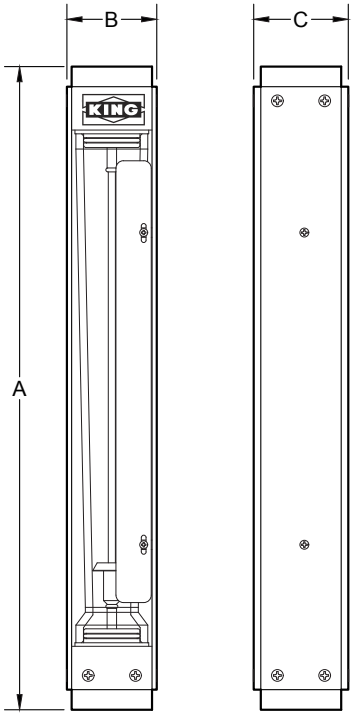

Order Number	Dimensions (Inches)		
	A	B	C
31- 46	17	2.5	2.375
51 - 56	17	2.5	2.375
61 - 613	17	2.5	2.375
84 - 98	19	4.5	4.500

** Tubes designated "G" have rib-guided floats. Tubes designated "P" have pole-guided floats.*

ORDERING:

Use the following guide to determine the specific product number you require.

7	4	5					*				

Meter Series

Order Number
See Specifications
** Only use this 4th box with order numbers 610W thru 613W. Otherwise leave blank.*

Fitting Material
316L SS - 2

O-Ring Material
EPR - 1
Buna-N - 2
Viton® - 3
Kalrez® - 4

Scale
Millimeter - 1
GPM Water@70°F - 2
LPM Water@70°F - 3
SCFM Air@STP - 4
SLPM Air@STP - 5
Non standard - 6

7460 Series

There is nothing else like it in the industry. This 75 mm scale glass tube meter offers economical 304 stainless steel case construction with vertical connections.

DESCRIPTION

Metering Tube	Borosilicate Kinglass
Internal Components	Standard: 316L SS Optional: Hastelloy®C-276
Fitting Material	Standard: 316L SS Optional: PVC
Inlet/Outlet Fittings	FNPT Vertical
O-Ring	Standard: Viton® Optional: Buna N, EPR, and Kalrez®
Case and Covers	304 SS case Polycarbonate shield

PERFORMANCE

Capacities	Water 0.5 to 25 GPM Air 2 to 68 SCFM
Scale	80 mm (3") direct reading, detachable
Accuracy	± 5% of full scale flow
Turndown	10:1
Repeatability	1%
Max Temperature	316L SS fittings Gases 250° F (121° C) 316L SS fittings Liquids 200° F (93° C) PVC fittings Liquids 110° F (43° C)
Maximum Pressure	316L SS 200 psig PVC fittings 150 psig
Ambient Temperature	33° F to 125° F (1° C to 52° C)

OPTIONS

Certified Calibrations	Conform to ISA RP 16.6
Scales	Any volumetric unit

FLOATS

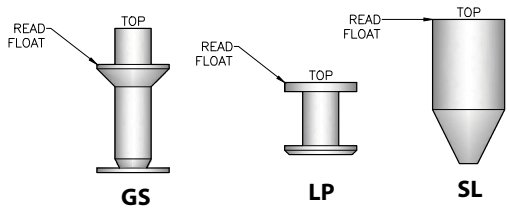

7460 Specifications

Order Number	Full Scale Flow GPM - Water	Full Scale Flow SCFM - Air	Float Number	Float Type	Pressure Drop (Inches of Water)	Tube Size	Tube Number*	Connection Size FNPT
41	.5	2.0	½-LPG-04	LP	–	4G (.50")	½ -751-4G	½"
42	1.0	4.0	½-LPG-05	LP	5	4G (.50")	½ -751-4G	½"
43	2.0	8.2	½-SLG-01	SL	9	4G (.50")	½ -751-4G	½"
44	3.5	14.0	⅝-SLP-01	SL	9	4P (.625")	⅝-753-4P	½"
45	5.6	22.0	⅝-SLP-02	SL	11	4P (.625")	⅝-753-4P	½"
46	7.4	29.0	⅝-SLP-03	SL	15	4P (.625")	⅝-753-4P	½"
61	10.0	40.0	1-GSP-01	GS	16	6P (1")	1-749-6P	1"
62	15.0	68.0	1-SLG-02	SL	24	6P (1")	1-749-6P	1"
63	25.0	–	1-SLG-01	SL	42	6P (1")	1-749-6P	1"

** Tubes designated "G" have rib-guided floats.*
Tubes designated "P" have pole-guided floats.

DIMENSION DIAGRAMS

(Inches)

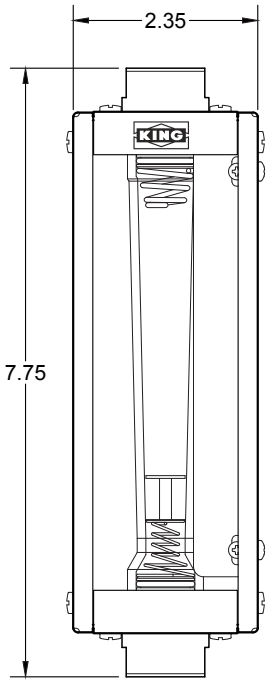

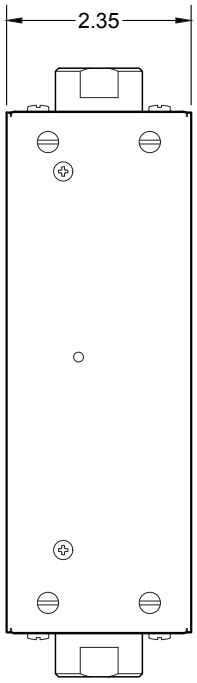

ORDERING:

Use the following guide to determine the specific product number you require.

7 4 6					
Meter Series	**Fitting Material** 316L SS - 1 PVC - 3 (Not for air)	**Float Material** 316L SS - 2 Hastelloy® C-276 - 4	**O-Ring Material** EPR - 1 Buna - N - 2 Viton® - 3 Kalrez® - 4	**Order Number** See Specifications above	**Scale** Water GPM - W Air SCFM - A Non Standard - N

7470 Series

Available with NPT or flange connections, vertical or horizontal, this 127 mm scale glass tube meter offers value and versatility in 304 stainless steel case construction.

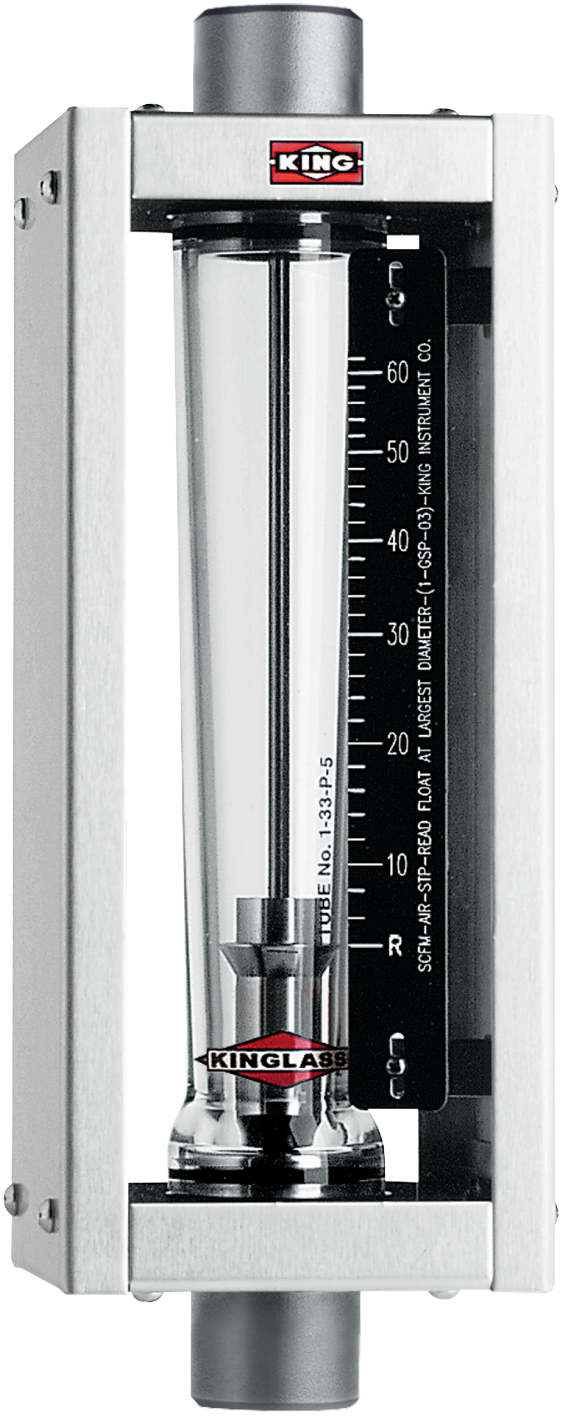

DESCRIPTION

Metering Tube	Borosilicate Kinglass
Internal Components	Standard: 316L SS Optional: Hastelloy® C-276
Fitting Material	Standard: 316L SS Optional: PVC (vertical connections only)
Inlet/Outlet Fittings	FNPT or flange, vertical or horizontal
O-Ring	Standard: Viton® Optional: Buna-N, EPR, and Kalrez®
Case and Covers	304 SS case Polycarbonate shield

PERFORMANCE

Capacities	Water	0.25 to 116 GPM	
	Air	1 to 245 SCFM	
Scale	127 mm (5") direct reading, detachable		
Accuracy	± 3% of full scale flow		
Turndown	10:1		
Repeatability	0.5%		
Max Temperature	316L SS fittings only	Gases	250° F (121° C)
	316L SS fittings	Liquids	200° F (93° C)
	PVC fittings	Liquids	110° F (43° C)
Max Pressure	316L SS fittings	250 psig, size 3 & 4	
	316L SS fittings	200 psig, size 5 & 6	
	316L SS fittings	150 psig, size 8 & 9	
	PVC fittings	150 psig	
Ambient Temperature	33° F to 125° F (1° C to 52° C)		

OPTIONS

Alarm	Latching Reed Switch (Page 55)
Certified Calibrations	Conform to ISA RP 16.6
Scales	Any volumetric unit

FLOATS

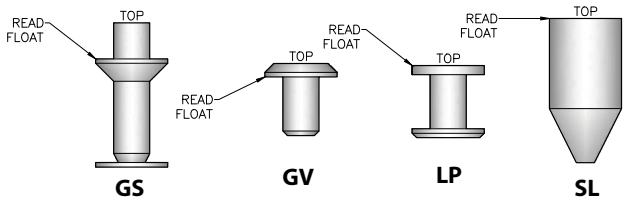

7470 Specifications

DIMENSION DIAGRAMS

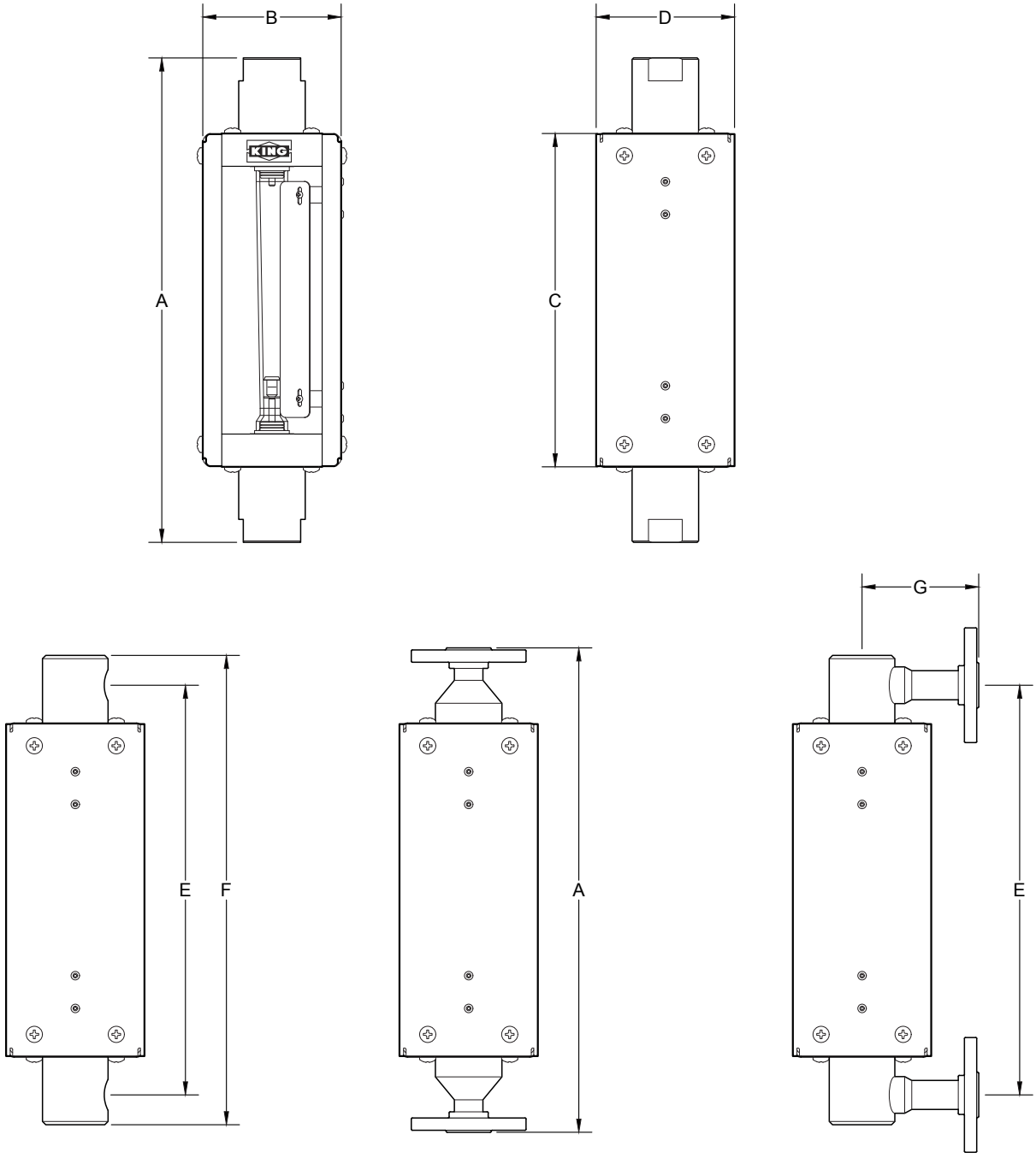

Order Number	Dimensions (Inches)						
	A	B	C	D	E	F	G
31 - 67	14.78	4.22	10.13	4.22	12.50	14.32	3.56
81 - 94	13.86	5.90	10.18	5.90	14.50	17.25	5.00

7470 Specifications

Order No.	Full Scale Flow GPM - Water	Full Scale Flow SCFM - Air	Alarm Opt.	Float Number	Float Type	Pressure Drop (Inches of Water)	Tube Size - Number*	Connection Size FNPT	Connection Size Flange
31	.25	1.0	No	⅜-LPG-01	LP	---	3G - ⅜-20-G-5	¾″	½″
32	.36	1.5	No	⅜-SLG-01	SL	2	3G - ⅜-20-G-5	¾″	½″
33	.74	3.0	No	⅜-SLG-02	SL	5	3G - ⅜-20-G-5	¾″	½″
41	1.0	4.2	No	½-LPG-01	LP	6	4G - ½-27-G-5	¾″	½″
43	2.0	8.2	Yes	½-SLG-01	GS	10	4G - ½-27-G-5	¾″	½″
51	1.5	6.0	No	¾-LPG-01	LP	3	5G - ¾-30-G-5	¾″	1″
52	3.8	16.0	Yes	¾-GSG-01	GS	10	5G - ¾-30-G-5	¾″	1″
53	5.0	21.5	Yes	¾-SLG-01	SL	14	5G - ¾-30-G-5	¾″	1″
61	6.0	25.5	No	1-GVP-01	GV	5	6P - 1-33-P-5	¾″	1″
62	7.4	30.0	No	1-GVP-02	GV	6	6P - 1-33-P-5	¾″	1″
63	9.6	40.0	No	1-GSP-01	GS	10	6P - 1-33-P-5	¾″	1″
64	11.0	45.0	No	1-GSP-02	GS	13	6P - 1-33-P-5	¾″	1″
65	14.0	62.0	No	1-GSP-03	GS	24	6P - 1-33-P-5	¾″	1″
66	20.0	90.0	Yes	1-SLP-01	SL	39	6P - 1-33-P-5	¾″	1″
67	26.0	—	Yes	1-SLP-02	SL	45	6P - 1-33-P-5	¾″	1″
81	22.0	90.0	Yes	1½-GVP-01	GV	16	8P - 1½-34-P-5	1 ½″	1 ½″
82	30.0	125.0	No	1½-GVP-02	SL	23	8P - 1½-34-P-5	1 ½″	1 ½″
83	44.0	180.0	Yes	1½-SLP-01	SL	30	8P - 1½-34-P-5	1 ½″	1 ½″
84	50.0	200.0	Yes	1½-SLP-02	SL	35	8P - 1½-34-P-5	1 ½″	1 ½″
85	61.0	250.0	Yes	1½-SLP-03	SL	40	8P - 1½-34-P-5	1 ½″	1 ½″
91	41.0	160.0	Yes	2-GVP-01	GV	5	9P - 2-33-P-5	1 ½″	1 ½″
92	60.0	245.0	Yes	2-GSP-01	GS	16	9P - 2-33-P-5	1 ½″	1 ½″
93	86.0	—	Yes	2-SLP-01	SL	25	9P - 2-33-P-5	1 ½″	1 ½″
94	116.0	—	Yes	2-SLP-02	SL	45	9P - 2-33-P-5	1 ½″	1 ½″

** Tubes designated "G" have rib-guided floats.*
Tubes designated "P" have pole-guided floats.

ORDERING:

Use the following guide to determine the specific product number you require.

7 4 7						
Meter Series	**Fitting Material**	**Float Material**	**O-Ring Material**	**Order Number**	**Scale**	**Alarm**
	Vertical FNPT - 316L SS - 1	316L SS - 2	EPR - 1	See Specs Above	Water GPM - W	Check Specs for Avail.
	Horizontal FNPT - 316L SS - 2	Hastelloy® C-276 - 4	Buna - N - 2		Air SCFM - A	Without Alarm - 0
	Vertical Flange - 150# - 3		Viton® - 3		Non Standard - N	With Alarm - 1
	Vertical Flange - 300# - 4		Kalrez® - 4			
	Horizontal Flange - 150# - 5					
	Horizontal Flange - 300# - 6					
	Vertical FNPT-PVC - 7 (not for air)					

7480 Series

This 250 mm scale, economical glass tube meter features 304 stainless steel case construction. NPT or flange, vertical or horizontal connections offer installation versatility.

DESCRIPTION

Metering Tube	Borosilicate Kinglass
Internal Components	Standard: 316L SS Optional: Hastelloy® C-276
Fitting Material	Standard: 316L SS Optional: PVC (vertical connections only)
Inlet/Outlet Fittings	FNPT or flange, vertical or horizontal
O-Ring	Standard: Viton® Optional: Buna N, EPR, and Kalrez®
Case and Covers	304 SS case Polycarbonate shield

PERFORMANCE

Capacities	Water Air	0.22 to 132 GPM 0.9 to 350 SCFM
Scale	250 mm (10") direct reading, detachable	
Accuracy	± 2% of full scale flow	
Turndown	10:1	
Repeatability	0.5%	
Maximum Temperature	316L SS fittings PVC fittings	Gases 200° F (93° C) Liquids 110° F (43° C)
Maximum Pressure	316L SS fittings 316L SS fittings 316L SS fittings PVC fittings* PVC fittings*	250 psig, size 3 & 4 250 psig, size 5 & 6 150 psig, size 8 & 9 150 psig, size 3, 4, 5 & 6 125 psig, size 8 & 9
Ambient Temperature	33° F to 125° F (1° C to 52° C)	

OPTIONS

Alarm	Latching Reed Switch (Page 55)
Certified Calibrations	Conform to ISA RP 16.6
Scales	Any volumetric unit.

FLOATS

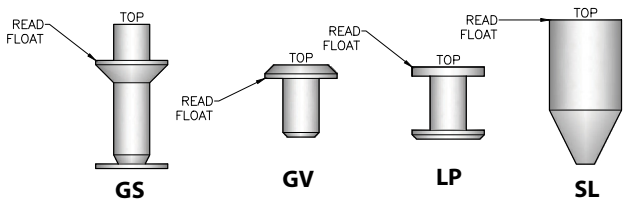

** Liquids service only*

7480 Specifications

DIMENSION DIAGRAMS

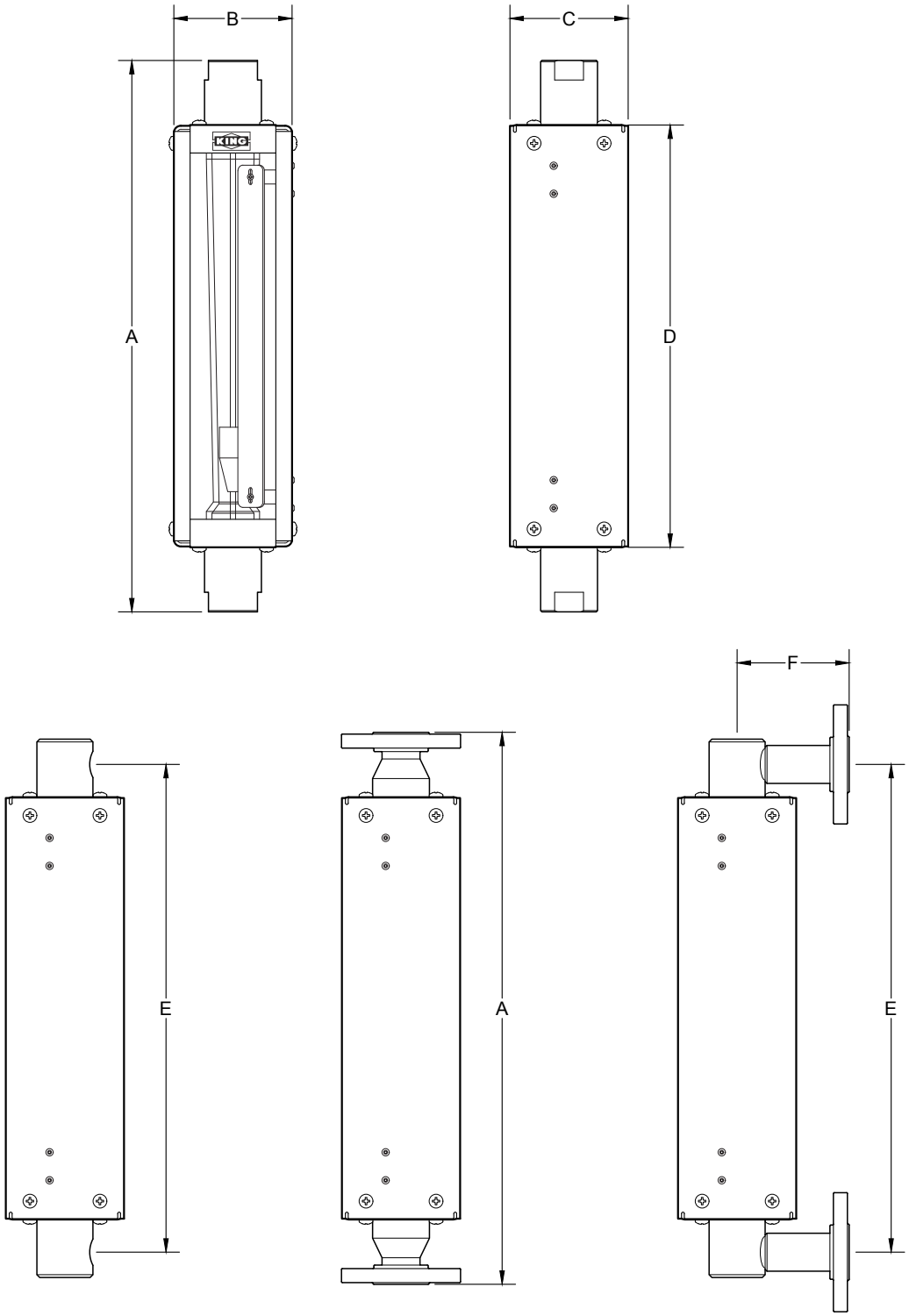

Order Number	Dimensions (Inches)					
	A	B	C	D	E	F
31 - 46	19.69	4.22	4.22	15.00	17.42	3.56
51 - 613	19.69	4.22	4.22	15.00	17.42	4.00
84 - 99	19.69	5.90	5.90	16.14	20.41	5

7480 Specifications

Order No.	Full Scale Flow GPM - Water	Full Scale Flow SCFM - Air	Alarm Opt.	Float Number	Float Type	Pressure Drop (Inches of Water)	Tube Size - Number*	Connection Size FNPT	Connection Size Flange
31	.22	.9	No	⅜-LPG-01	LP	—	3G - ⅜-20-G-10	¾″	½″
32	.315	1.4	No	⅜-SLG-01	SL	2	3G - ⅜-20-G-10	¾″	½″
33	.64	2.7	No	⅜-SLG-02	SL	7	3G - ⅜-20-G-10	¾″	½″
41	.77	3.4	No	½-LPG-01	LP	6	4G - ½-32-G-10	¾″	½″
42	1.02	4.4	No	½-LPG-02	LP	10	4G - ½-32-G-10	¾″	½″
43	1.20	5.0	Yes	½-GVG-01	GV	10	4G - ½-32-G-10	¾″	½″
44	1.44	6.1	No	½-GSG-01	GS	15	4G - ½-32-G-10	¾″	½″
45	1.92	8.5	Yes	½-SLG-01	SL	28	4G - ½-32-G-10	¾″	½″
46	2.26	10.2	Yes	½-SLG-02	SL	41	4G - ½-32-G-10	¾″	½″
51	1.1	4.5	No	¾-LPG-01	SL	1	5G - ¾-28-G-10	¾″	1″
52	2.4	10.0	Yes	¾-GVG-01	SL	4	5G - ¾-28-G-10	¾″	1″
53	3.0	12.0	Yes	¾-GSG-01	SL	5	5G - ¾-28-G-10	¾″	1″
54	3.3	13.2	Yes	¾-GVG-02	SL	6	5G - ¾-28-G-10	¾″	1″
55	4.0	16.4	Yes	¾-GSG-02	SL	6	5G - ¾-28-G-10	¾″	1″
56	5.2	22.0	Yes	¾-SLG-01	SL	18	5G - ¾-28-G-10	¾″	1″
61	6.9	—	Yes	1-LPG-02	LP	4	6G - 1-32-G-10	¾″	1″
62	9.8	—	No	1-SLG-01	SL	8	6G - 1-32-G-10	¾″	1″
63	12.6	—	Yes	1-SLG-02	SL	13	6G - 1-32-G-10	¾″	1″
64	6.7	27.0	No	1-LPP-01	LP	4	6P - 1-40-P-10	¾″	1″
65	7.4	30.0	No	1-GVP-01	GV	6	6P - 1-40-P-10	¾″	1″
66	8.5	35.0	No	1-GVP-02	GV	8	6P - 1-40-P-10	¾″	1″
67	10.4	42.5	No	1-GSP-01	GS	10	6P - 1-40-P-10	¾″	1″
68	11.6	46.5	No	1-GVP-03	GV	15	6P - 1-40-P-10	¾″	1″
69	12.0	50.0	No	1-GSP-02	GS	14	6P - 1-40-P-10	¾″	1″
610	15.6	63.0	No	1-GSP-03	GS	24	6P - 1-40-P-10	¾″	1″
611	21.6	100.0	Yes	1-SLP-01	SL	61	6P - 1-40-P-10	¾″	1″
612	27.5	—	Yes	1-SLP-02	SL	85	6P - 1-40-P-10	¾″	1″
613	34.5	—	Yes	1-SLP-03	SL	110	6P - 1-40-P-10	¾″	1″
84	17.0	70.0	No	1½-GVP-01	LP	2	8P - 1½-32-P-10	1 ½″	1 ½″
85	21.2	87.0	No	1½-GVP-02	LP	4	8P - 1½-32-P-10	1 ½″	1 ½″
86	22.2	—	No	1½-GSP-01	LP	6	8P - 1½-32-P-10	1 ½″	1 ½″
87	24.8	102.0	No	1½-GVP-03	GV	10	8P - 1½-32-P-10	1 ½″	1 ½″
88	28.5	—	No	1½-GSP-02	GV	20	8P - 1½-32-P-10	1 ½″	1 ½″
89	35.0	—	No	1½-GSP-03	GS	24	8P - 1½-32-P-10	1 ½″	1 ½″
94	41.5	170.0	No	2-GVP-01	GV	2	9P - 2-30-P-10	1 ½″	1 ½″
95	58.0	240.0	No	2-GSP-01	GS	6	9P - 2-30-P-10	1 ½″	1 ½″
96	65.0	270.0	No	2-GSP-02	GS	10	9P - 2-30-P-10	1 ½″	1 ½″
97	85.0	350.0	No	2-SLP-00	SL	40	9P - 2-30-P-10	1 ½″	1 ½″
98	100.0	—	No	2-SLP-01	SL	50	9P - 2-30-P-10	1 ½″	1 ½″
99	132.0	—	No	2-SLP-02	SL	60	9P - 2-30-P-10	1 ½″	1 ½″

** Tubes designated "G" have rib-guided floats.*
Tubes designated "P" have pole-guided floats.

ORDERING:

Use the following guide to determine the specific product number you require.

7 4 8	☐	☐	☐	☐☐☐ *	☐	☐
Meter Series	**Fitting Material**	**Float Material**	**O-Ring Material**	**Order Number**	**Scale**	**Alarm**
	Vertical FNPT - 316L SS - 1	316L SS - 2	EPR - 1	See Specification	Water GPM - W	Check Specifications for availability
	Horizontal FNPT - 316L SS - 2	Hastelloy® C-276 - 4	Buna-N - 2		Air SCFM - A	
	Vertical Flange - 150# - 3		Viton® - 3	** Only use this 3rd box with order numbers 610 thru 613. Otherwise leave blank.*	Non Standard - N	Without Alarm - 0
	Vertical Flange - 300# - 4		Kalrez® - 4			With Alarm - 1
	Horizontal Flange - 150# - 5					
	Horizontal Flange - 300# - 6					
	Vertical FNPT-PVC - 7 (not for air service)					

7510 / 7511 Series

Acrylic block construction with direct reading scales have white screen printed backs to enhance scale readability. Connections are in-line for easy installation.

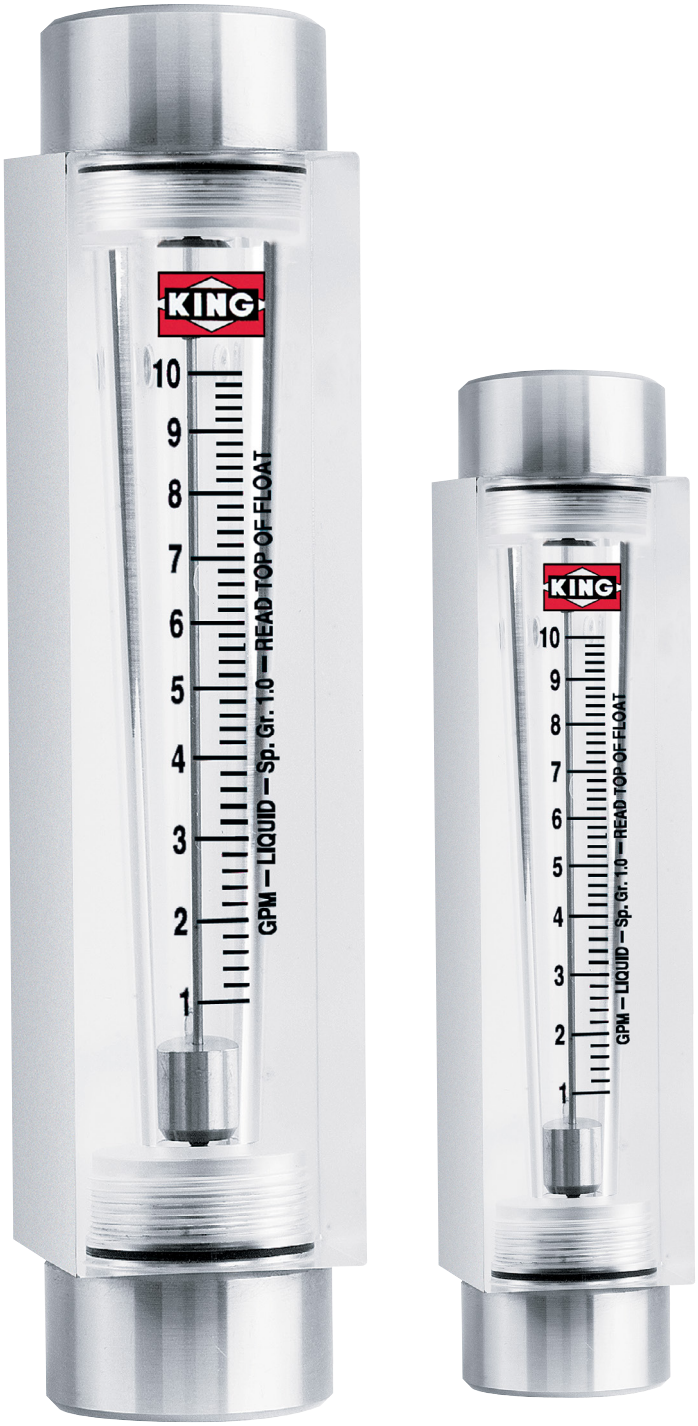

DESCRIPTION

Metering Tube	Machined cast acrylic
Internal Components	316L SS
Fitting Material	Standard: PVC Optional: 316L SS, brass
Inlet/Outlet Fittings	FNPT, vertical
O-Ring	Standard: EPR Optional: Buna N, Viton

PERFORMANCE

Capacities	Water 7 GPH to 20 GPM Air 2.6 SCFH to 60 SCFM
Scale	50mm, 65mm, 100mm, 127mm, 250mm direct reading
Accuracy	± 6% of full scale flow, 50mm scale ± 5% of full scale flow, 65mm scale ± 4% of full scale flow, 100mm scale ± 3% of full scale flow, 127mm scale ± 2% of full scale flow, 250mm scale
Turndown	10:1 Unless otherwise noted
Repeatability	3%, 50 mm scale 2%, 75 mm scale 2%, 100 mm scale 2%, 127 mm scale 0.5%, 250 mm scale
Maximum Temperature	Liquid 130° F (54° C) Gases 100° F (38° C)
Maximum Pressure	Water 150 psig Air 125 psig
Ambient Temperature	33° F to 125° F (1° C to 52° C)

OPTIONS

Certified Calibrations	Conform to ISA RP 16.6
Scales	Any volumetric unit

FLOATS

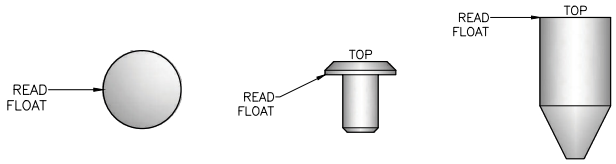

BL **GV** **SL**

CAUTION: *Meters used in gas service are designed to operate at 14.7 psia. Meters used in pressure gas service must be shielded using 3/8" polycarbonate to protect personnel and equipment in the event of tube failure.*

7510 / 7511 Specifications

DIMENSION DIAGRAMS

2A BLOCKS

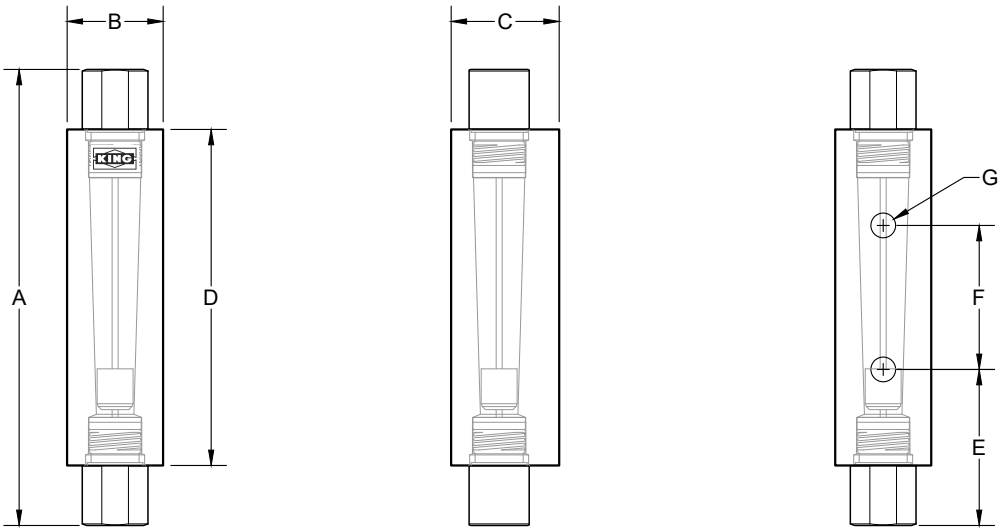

2B / 5B / 6A / 7A BLOCKS

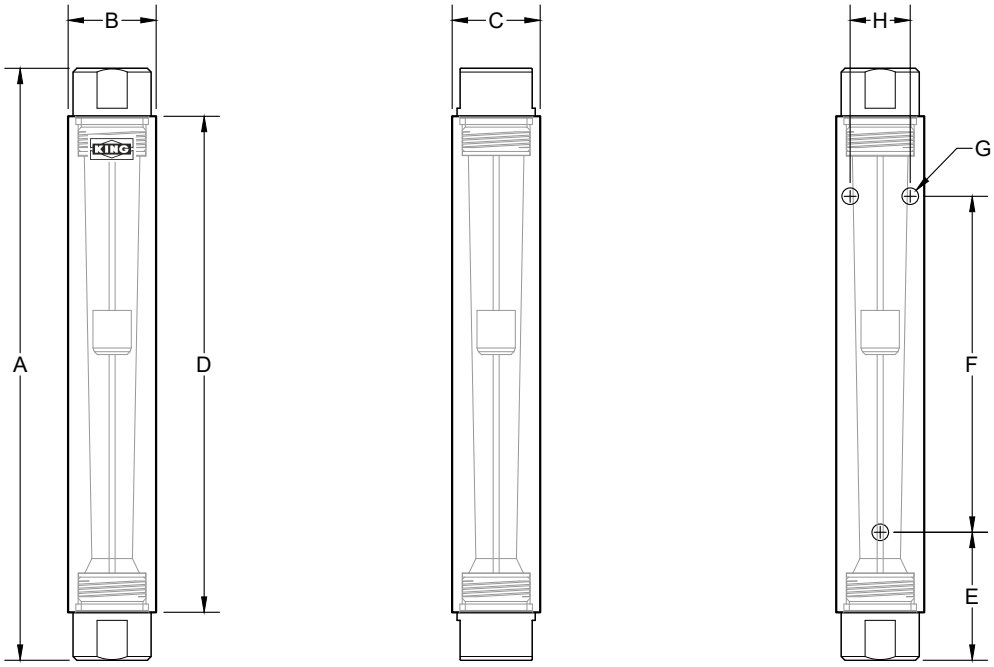

7510 / 7511 Specifications

Water Order Number	Air Order Number	Dimensions (Inches) A	B	C	D	E	F	G	H	Connection Size
Block #2A*, 50mm (2 Inch) Scale										
2A-02 - 2A-12	2A-01 - 2A-17	4.75	1	1.125	3.50	1	1.50	10-32		¼" FNPT*
Block #2B, 65mm (2 1/2 Inch) Scale										
2B-02 - 2B-08	2B-01 - 2B-07	6.50	1.375	1.375	5	1.25	2.50	10-32	.937	½" FNPT
Block #5B, 127mm (5 Inch) Scale										
5B-02 - 5B-08	5B-01 - 5B-07	9.25	1.375	1.375	7.75	1.25	5.25	10-32	.937	½" FNPT
Block #6A, 100mm (4 Inch) Scale										
6A-02 - 6A-06	6A-01 - 6A-03	8.375	1.78	1.812	6.625	1.312	4	10-32	1.25	1" FNPT
Block #7A, 250mm (10 Inch) Scale										
7A-02 - 7A-08	7A-01- 7A-07	14.78	1.78	1.812	13	2.50	8	10-32	1.25	¾" FNPT

**Block 2A has ¼" FNPT with brass or stainless steel fitting, ¼" MNPT with PVC fittings*

*** 10-32 female thread (mounting screws not supplied)*

Order Number	Float	Flow Water	Order Number	Float	Flow Air
Block #2A, 50mm (2 Inch) Scale					
—		—	2A-01*	BL	2.6 SCFH
—		—	2A-03**	BL	5 SCFH
—		—	2A-05*	BL	10 SCFH
—		—	2A-07*	BL	20 SCFH
2A-02	SL	7 GPH	2A-09**	BL	30 SCFH
2A-04	SL	12 GPH	2A-11***	SL	70 SCFH
2A-06	SL	22 GPH	2A-13	SL	100 SCFH
2A-08	SL	44 GPH	2A-15	SL	180 SCFH
2A-10	SL	60 GPH	2A-17	SL	4 SCFM
2A-12	SL	75 GPH	—		—

**These meters have glass ball floats.*

***These meters have stainless steel ball floats.*

**** These meters have less than 10:1 turndown.*

Order Number	Float	Flow Water	Order Number	Float	Flow Air
Block #2B, 65mm (2 1/2 Inch) Scale					
2B-02	GV	1 GPM	2B-01	GV	4 SCFM
2B-04	GV	2 GPM	2B-03	GV	8 SCFM
2B-06	SL	3.6 GPM	2B-05	SL	15 SCFM
2B-08	SL	5 GPM	2B-07	SL	20 SCFM
Block #5B, 127mm (5 Inch) Scale					
5B-02	GV	1 GPM	5B-01	GV	4.2 SCFM
5B-04	GV	2 GPM	5B-03	GV	8.2 SCFM
5B-06	SL	3.5 GPM	5B-05	SL	15 SCFM
5B-08	SL	5 GPM	5B-07	SL	21 SCFM
Block #6A, 100mm (4 Inch) Scale					
6A-02	SL	10 GPM	6A-01	SL	40 SCFM
6A-04	SL	15 GPM	6A-03	SL	60 SCFM
6A-06	SL	20 GPM	—		—
Block #7A, 250mm (10 Inch) Scale					
7A-02	GV	2 GPM	7A-01	GV	8 SCFM
7A-04	GV	3.5 GPM	7A-03	GV	14.8 SCFM
7A-06	GV	5 GPM	7A-05	GV	20 SCFM
7A-08	SL	10 GPM	7A-07	SL	42 SCFM

ORDERING:

Use the following guide to determine the specific product number you require.

7 5 1				
Meter Series	**Fitting Material**	**O-Ring Material**	**Order Number**	**Scale**
7510 - 2A, 6A, 7A 7511 - 2B, 5B	Brass - 1 PVC - 2 316L SS - 3	EPR - 1 Buna-N - 2 Viton - 3	See Specifications	Standard - Leave Blank Non Standard - N

7520 / 7530 Series

Economical machined cast acrylic block construction makes these meters great for OEM use. Optional inlet metering valve available.

DESCRIPTION

Metering Tube	Machined cast acrylic
Internal Components	316L SS
Fitting Material	Standard: PVC (brass for 2C block size) Optional: 316L SS or brass
Inlet/Outlet Fittings	NPT, horizontal Control valve optional
O-Ring	Standard: EPR Optional: Buna N, Viton®, and Kalrez®

PERFORMANCE

Capacities	Water 7 GPH to 20 GPM Air 2.6 SCFH to 60 SCFM
Scale	50mm, 75mm, 100mm, 127mm, 250mm direct reading
Accuracy	± 6% of full scale flow, 50 mm scale ± 4% of full scale flow, 75 mm scale ± 4% of full scale flow, 100 mm scale ± 7% of full scale flow, 6C-04, 6C-06 ± 3% of full scale flow, 127 mm scale ± 2% of full scale flow, 250 mm scale
Turndown	10:1 Unless otherwise noted
Repeatability	3%, 50 mm scale 2%, 75 mm scale 2%, 100 mm scale 4%, 6C-04, 6C-06 2%, 127 mm scale 0.5%, 250 mm scale
Maximum Temperature	Liquid 130° F (54° C) Gases 100° F (38° C)
Maximum Pressure	Water 150 psig Air 125 psig
Ambient Temperature	33° F to 125° F (1° C to 52° C)

OPTIONS

Certified Calibrations	Conform to ISA RP 16.6
Scales	Any volumetric unit

FLOATS

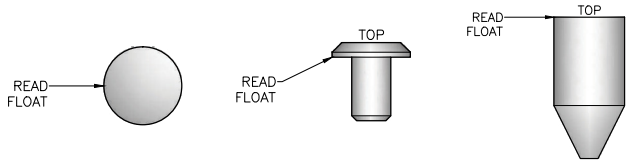

BL **GV** **SL**

CAUTION: *Meters used in gas service are designed to operate at 14.7 psia. Meters used in pressure gas service must be shielded using 3/8" polycarbonate to protect personnel and equipment in the event of tube failure.*

7520 / 7530 Specifications

DIMENSION DIAGRAMS

2C BLOCK

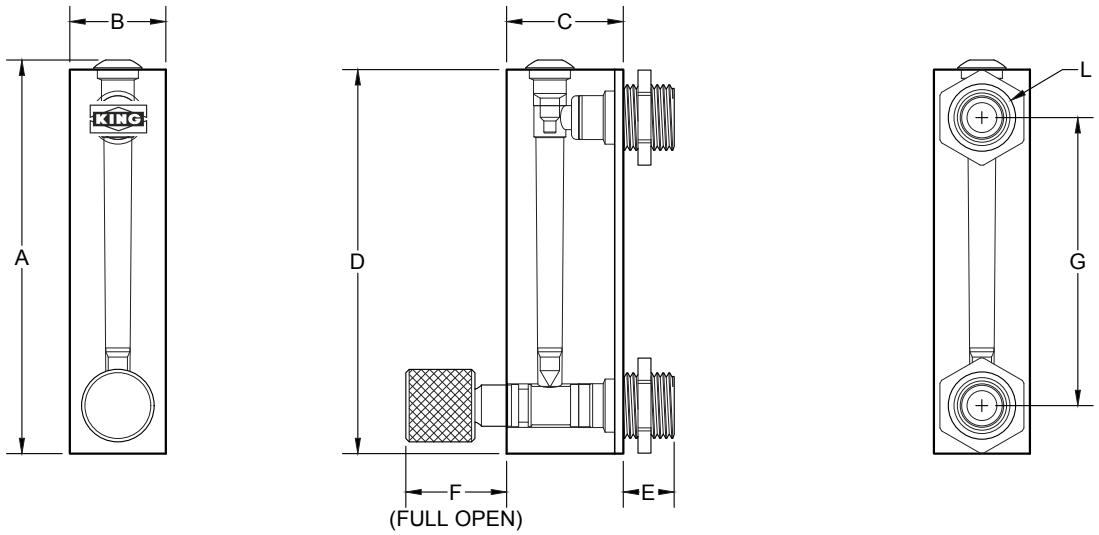

3C / 5C / 6C / 7C BLOCKS

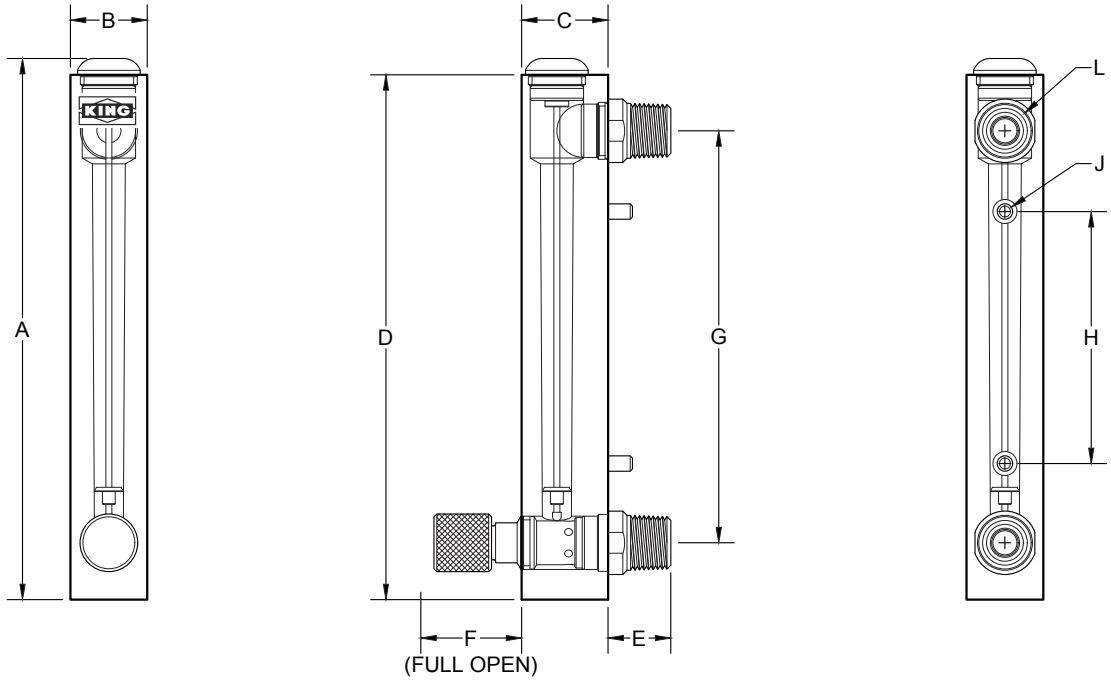

Water Order Number	Air Order Number	Dimensions (Inches) A	B	C	D	E	F	G	Connections & Mounting Connection Size	Centerline H	Thread J	Diameter L
Block #2C, 50mm (2 Inch) Scale												
2C-02 – 2C-12	2C-01 - 2C-17	4.125	1	1.215	4	.50	1.05	3	¼″ FNPT			.700
Block #3C, 75mm (3 Inch) Scale												
3C-02 – 3C-08	3C-01 - 3C-07	6.875	1.20	1.35	6.625	1	1.37	5	½″ MNPT x ¼″FNPT	3	.25 - 20	1
Block #5C, 127mm (5 Inch) Scale												
5C-10 – 5C-08	5C-11 - 5C-07	8.45	1.20	1.35	8.25	1	1.37	6.437	½″ MNPT x ¼″FNPT	3.937	.25 - 20	1
Block #6C, 100mm (4 Inch) Scale												
6C-02 – 6C-06	6C-01 - 6C-03	9.125	1.78	1.812	8.875	1.25	1.875	6.437	1″ MNPT	3.937	.25 - 20	1.375
Block #7C, 250mm (10 Inch) Scale												
7C-02 – 7C-08	7C-01 - 7C-07	14.50	1.78	1.812	14.25	.75	1.75	12.25	½″ FNPT	8.75	.375 - 24	1.25

7520 / 7530 Specifications

Order Number	Float	Flow Water	Order Number	Float	Flow Air
Block #2C, 50mm (2 Inch) Scale					
–		–	2C-01*	BL	2.6 SCFH
–		–	2C-03**	BL	5 SCFH
–		–	2C-05*	BL	10 SCFH
–		–	2C-07*	BL	20 SCFH
2C-02	SL	7 GPH	2C-09**	BL	30 SCFH
2C-04	SL	12 GPH	2C-11	SL	60 SCFH
2C-06	SL	22 GPH	2C-13	SL	100 SCFH
2C-08	SL	44 GPH	2C-15	SL	180 SCFH
2C-10	SL	60 GPH	2C-17	SL	4 SCFM
2C-12	SL	75 GPH	–		–

**These meters have glass ball floats*

***These meters have stainless steel ball floats.*

Order Number	Float	Flow Water	Order Number	Float	Flow Air
Block #3C, 75mm (3 Inch) Scale					
3C-02	GV	1 GPM	3C-01	GV	4 SCFM
3C-04	GV	2 GPM	3C-03	GV	8.2 SCFM
3C-06	SL	3.5 GPM	3C-05	SL	15 SCFM
3C-08	SL	5 GPM	3C-07	SL	23 SCFM
Block #5C, 127mm (5 Inch) Scale					
5C-10	GV	10 GPH	5C-11	GV	42 SCFH
5C-12	SL	20 GPH	5C-13	SL	100 SCFH
5C-14	SL	40 GPH	5C-15***	SL	175 SCFH
5C-02	GV	1 GPM	5C-01	GV	4 SCFM
5C-04	GV	100 GPH	5C-03	GV	6.8 SCFM
5C-06	GV	2 GPM	5C-05	GV	8.2 SCFM
5C-08	SL	5 GPM	5C-07	SL	22 SCFM
Block #6C, 100mm (4 Inch) Scale					
6C-02	SL	10 GPM	6C-01	SL	40 SCFM
6C-04	SL	15 GPM	6C-03	SL	60 SCFM
6C-06	SL	20 GPM	—		—
Block #7C, 250mm (10 Inch) Scale					
7C-02	GV	2 GPM	7C-01	GV	8 SCFM
7C-04	GV	3.5 GPM	7C-03	GV	14.4 SCFM
7C-06	GS	5 GPM	7C-05	GS	20 SCFM
7C-08	SL	10 GPM	7C-07	SL	42 SCFM

Blocks 3C, 5C, 6C and 7C have mounting studs depicted in dimension "H" and thread "J". (Mounting nuts not supplied)

**** These meters have less than 10:1 turndown.*

ORDERING:

Use the following guide to determine the specific product number you require.

7	5														
Meter Series				**Fitting Material**		**O-Ring Material**		**Valve Material**		**Order Number**				**Scale**	
7520 No valve				Brass - 1		EPR - 1		Brass - 1		See Specifications				Standard - Leave Blank	
7530 With valve				PVC - 2 (2C not available in PVC)		Buna-N - 2		316L SS - 2						Non Standard - N	
				316L SS - 3		Viton® - 3		Without Valve - 0							

7610 Series

7610 models feature fully enclosed, 127 mm scale, borosilicate glass metering tube with 304 stainless steel case. In-line 316L fittings and internals or PVC fittings with Hastelloy®C-276 internals are suitable for a variety of applications.

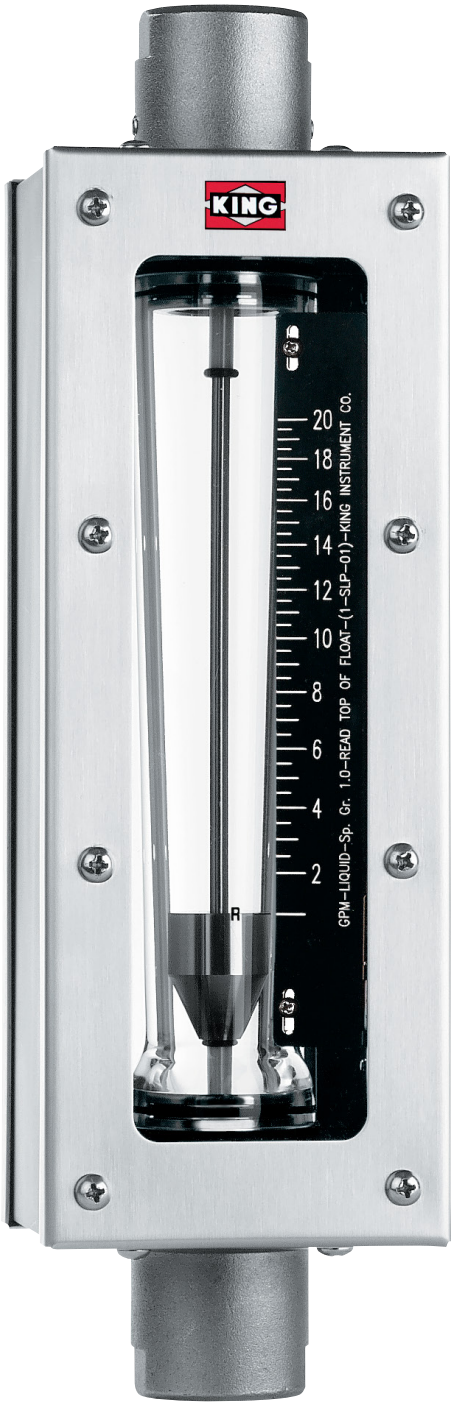

DESCRIPTION

Metering Tube	Borosilicate Kinglass
Internal Components	Standard: 316L SS Optional: Hastelloy® C-276
Fitting Material	Standard: 316L SS Optional: PVC
Inlet/Outlet Fittings	FNPT, vertical
O-Ring	Standard: Viton® Optional: Buna N, EPR, and Kalrez®
Case and Covers	304 SS case Polycarbonate shield

PERFORMANCE

Capacities	Water Air	0.25 to 116 GPM 1 to 245 SCFM
Scale	127 mm (5") direct reading, detachable	
Accuracy	± 3% of full scale flow	
Turndown	10:1	
Repeatability	0.5%	
Maximum Temperature	316L SS fittings PVC fittings	200° F (93° C) 110° F (43° C)
Maximum Pressure	316L SS fittings 316L SS fittings 316L SS fittings PVC fittings	250 psig, size 3 & 4 200 psig, size 5 & 6 150 psig, size 8 & 9 100 psig
Ambient Temperature	33° F to 125° F (1° C to 52 ° C)	

OPTIONS

Alarm	Latching Reed Switch (Page 55)
Certified Calibrations	Conform to ISA RP 16.6
Scales	Any volumetric unit

FLOATS

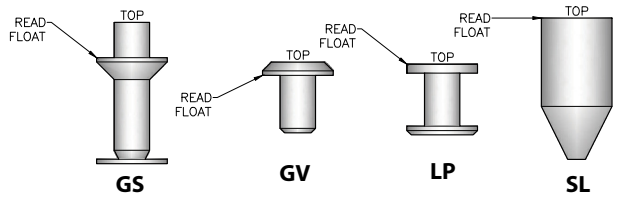

7610 Specifications

Order No.	Full Scale Flow GPM - Water	Full Scale Flow SCFM - Air	Alarm Opton	Float Number	Float Type	Pressure Drop (Inches of Water)	Tube Size Number*
31	.25	1.0	No	⅜ -LPG-01	LP	—	3G - ⅜-20-G-5
32	.36	1.5	No	⅜-SLG-01	SL	2	3G - ⅜-20-G-5
33	.74	3.0	No	⅜ -SLG-02	SL	5	3G - ⅜-20-G-5
41	1.0	4.2	No	½-LPG-01	LP	6	4G - ½ -27-G-5
43	2.0	8.2	Yes	½ -SLG-01	GS	10	4G - ½-27-G-5
51	1.5	6.0	No	¾ -LPG-01	LP	3	5G - ¾ -30-G-5
52	3.8	16.0	Yes	¾ -GSG-01	GS	10	5G - ¾ -30-G-5
53	5.0	21.5	Yes	¾ -SLG-01	SL	14	5G - ¾ -30-G-5
61	6.0	25.5	No	1-GVP-01	GV	5	6P - 1-33-P-5
62	7.4	30.0	No	1-GVP-02	GV	6	6P - 1-33-P-5
63	9.6	40.0	No	1-GSP-01	GS	10	6P - 1-33-P-5
64	11.0	45.0	No	1-GSP-02	GS	13	6P - 1-33-P-5
65	14.0	62.0	No	1-GSP-03	GS	24	6P - 1-33-P-5
66	20.0	90.0	Yes	1-SLP-01	SL	39	6P - 1-33-P-5
67	26.0	—	Yes	1-SLP-02	SL	45	6P - 1-33-P-5
81	22.0	90.0	Yes	1 ½-GVP-01	GV	16	8P - 1 ½-34-P-5
82	44.0	180.0	Yes	1 ½-SLP-01	SL	30	8P - 1 ½-34-P-5
83	61.0	250.0	Yes	1 ½-SLP-02	SL	40	8P - 1 ½-34-P-5
91	41.0	160.0	Yes	2-GVP-01	GV	5	9P - 2-33-P-5
92	60.0	245.0	Yes	2-GSP-01	GS	16	9P - 2-33-P-5
93	86.0	—	Yes	2-SLP-01	SL	25	9P - 2-33-P-5
94	116.0	—	Yes	2-SLP-02	SL	45	9P - 2-33-P-5

** Tubes designated "G" have rib-guided floats.*
Tubes designated "P" have pole-guided floats.

DIMENSION DIAGRAMS

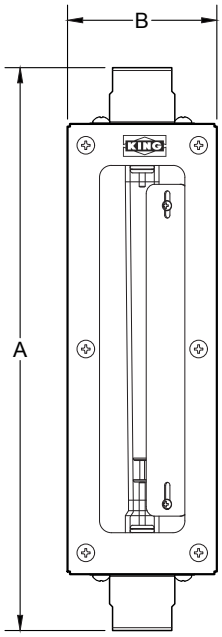

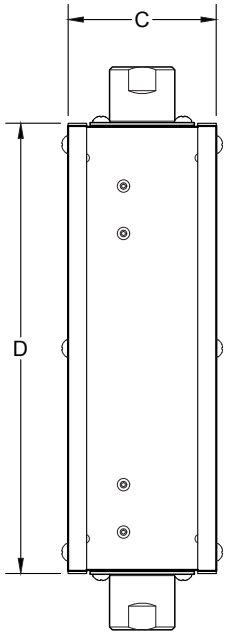

Order Number	Dimensions (Inches) A	B	C	D	Connection Size FNPT
31 - 43	11.875	3.15	3.125	9.50	½"
51 - 67	13.75	3.95	3.90	10.60	1"
81 - 94	16	5.312	5.375	11.80	2"

ORDERING:

Use the following guide to determine the specific product number you require.

7 6 1						
Meter Series	**Fitting Material**	**Float Material**	**O-Ring Material**	**Alarm**	**Order Number**	**Scale**
	316L SS - 2	316L SS - 2	EPR - 1	No Alarm - 0	See Specification	Water GPM - W
	PVC (not for air service) - 3	Hastelloy® C-276 - 4	Buna-N - 2	Alarm - A	above	Air SCFM - A
			Viton® - 3			Non Standard - N
			Kalrez® - 4			

7650 Series

A chemically resistant, borosilicate glass tube meter series for liquid service. It features a clear polycarbonate shield surrounding the glass metering tube. It is assembled in a 304 SS tie rod frame. It offers CPVC and Hastelloy® C-276 as optional materials of construction, suitable for a wide range of chemical and corrosive applications. O-ring seals allow for easy disassembly and cleaning.

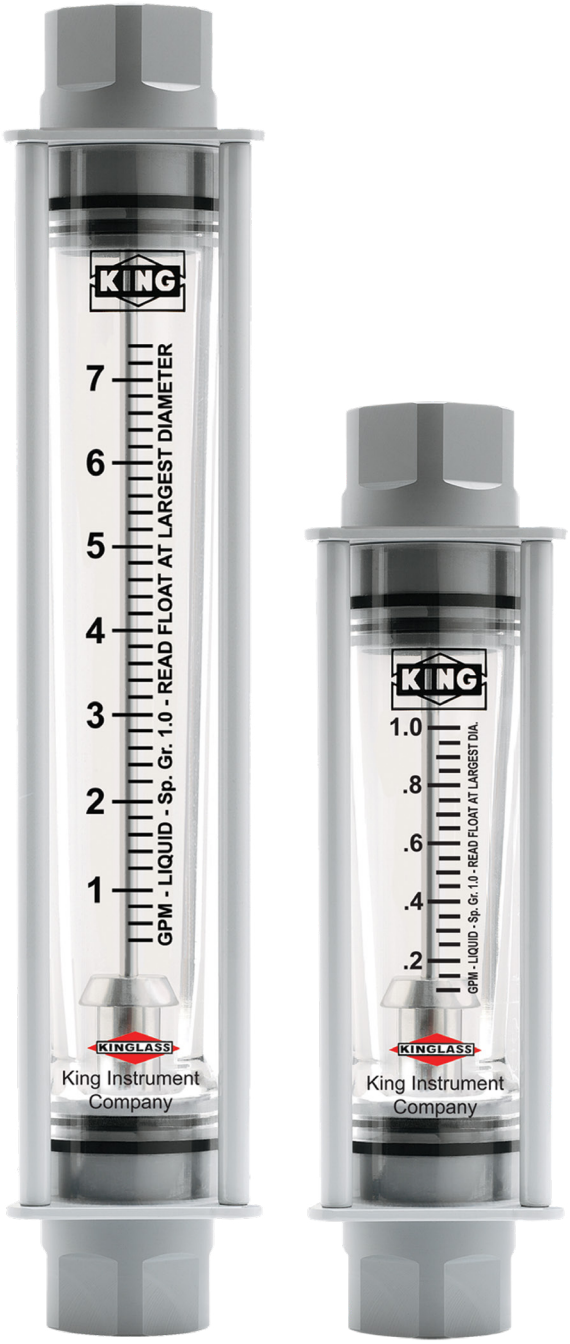

DESCRIPTION

Metering Tube	Borosilicate Kinglass
Internal Components	316L SS Hastelloy® C-276
Inlet/Outlet Fittings	FNPT, vertical
Fitting Material	PVC, CPVC
O-Ring	EPR, Buna-N, Viton®, Kalrez®

PERFORMANCE

Capacities	Water 0.25 to 26 GPM
Scale	80 mm (3") , 127 mm (5") direct reading
Accuracy	± 5% of 3" full scale flow ± 3% of 5" full scale flow
Turndown	10:1
Repeatability	0.5%
Maximum Temperature	140° F (60° C)
Maximum Pressure	100 psig
Ambient Temperature	33° F to 125° F (1° C to 52° C)

OPTIONS

Certified Calibrations	Conform to ISA RP 16.6
Scales	Any volumetric unit

FLOATS

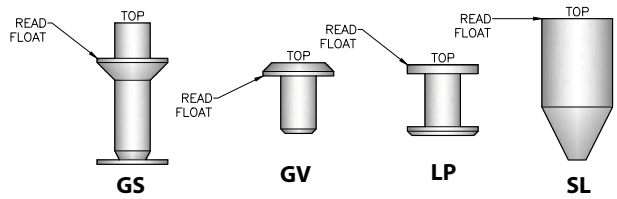

7650 Specifications

80 mm (3 inch) Scale						
Order Number	Full Scale Flow GPM - Water	Float Number	Float Type	Pressure Drop (Inches of Water)	Tube Size	Tube Number
41	.5	½-LPG-04	LP	––	4G	½-751-4G
42	1.0	½-LPG-05	LP	5	4G	½-751-4G
43	2.0	½-SLG-01	SL	9	4G	½-751-4G
44	3.5	⅝-SLP-01	SL	9	4P	⅝-753-4P
45	5.6	⅝-SLP-02	SL	11	4P	⅝-753-4P
46	7.4	⅝-SLP-03	SL	15	4P	⅝-753-4P
60	10.0	1-GSP-01	GS	16	6P	1-749-6P
61	15.0	1-GSP-02	GS	24	6P	1-749-6P
62	25.0	1-SLG-01	SL	42	6P	1-749-6P

127 mm (5 inch) Scale						
Order Number	Full Scale Flow GPM - Water	Float Number	Float Type	Pressure Drop (Inches of Water)	Tube Size	Tube Number*
31	.25	⅜-LPG-01	LP	---	3G	⅜-20-G-5
32	.36	⅜-SLG-01	SL	2	3G	⅜-20-G-5
33	.74	⅜-SLG-02	SL	5	3G	⅜-20-G-5
47	1.0	½-LPG-01	LP	6	4G	½-27-G-5
48	2.0	½-SLG-01	SL	10	4G	½-27-G-5
51	1.5	¾-LPG-01	LP	3	5G	¾-30-G-5
52	3.8	¾-GSG-01	GS	10	5G	¾-30-G-5
53	5.0	¾-SLG-01	SL	14	5G	¾-30-G-5
63	6.0	1-GVP-01	GV	5	6P	1-33-P-5
64	7.4	1-GVP-02	GV	6	6P	1-33-P-5
65	9.6	1-GSP-01	GS	10	6P	1-33-P-5
66	11.0	1-GSP-02	GS	13	6P	1-33-P-5
67	14.0	1-GSP-03	GS	24	6P	1-33-P-5
68	20.0	1-SLP-01	SL	39	6P	1-33-P-5
69	26.0	1-SLP-02	SL	45	6P	1-33-P-5

** Tubes designated "G" have rib-guided floats.*
Tubes designated "P" have pole-guided floats.

DIMENSION DIAGRAM

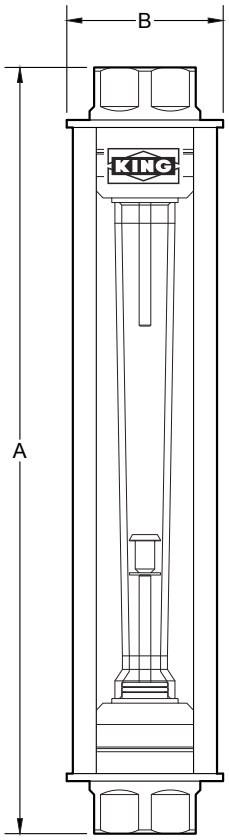

Dimensions (Inches)		
Detail Letter	Scale length 80mm	Scale length 127mm
A	9.00"	12.25"
B	2.50"	2.50"

ORDERING:

Use the following guide to determine the specific product number you require.

7 6 5						
Meter Series	**Scale Size** 80 mm (3 inch) - 1 127 mm (5 inch) - 2	**Fitting Material** PVC 1" FNPT - 3 CPVC 1" FNPT - 4	**Float Material** 316L SS - 2 Hastelloy® C-276 - 4	**O-Ring Material** EPR - 1 Buna-N - 2 Viton® - 3 Kalrez® - 4	**Order Number** See Specifications	**Scale** Water GPM - W Non Standard - N

7710 Series

This all 316L stainless steel meter utilizes a float and tapered tube design which offers longer, more linear scales, better pointer stability and 40% greater accuracy than competitively priced products. A 4-20mA transmitter option adds to its versatility.

DESCRIPTION

Metering Tube	316L SS
Internal Components	316L SS
Fitting Material	316L SS
Inlet/Outlet Fittings	316L SS NPT or flange, vertical
O-Ring	Standard: Viton® Optional: Buna N, EPR, Kalrez®
Indicator Housing	Die-cast Aluminum / Powder Coated with Chemfilm base (RoHS Compliant) Rated IP66 (Excludes Alarm and Transmitter Cases)

PERFORMANCE

Capacities	Water 33 GPH to 450 GPM Air 4 to 100 SCFM
Scale	120 mm direct reading, detachable
Accuracy	± 3% of full scale flow
Turndown	10:1
Repeatability	1 %
Maximum Temperature	**O-Ring Material** / **Max Temperature** EPR 225° F (107° C) Buna-N 275° F (135° C) Viton® 350° F (177° C) Kalrez® 400° F (204° C)
Maximum Pressure	NPT fittings 1,500 psi

SS flange class

Temp F	**150#**	**300#**	**600#**
200°	225 psi	600 psi	1,200 psi
300°	200 psi	540 psi	1,100 psi
400°	180 psi	515 psi	1,000 psi

Ambient Temperature	-40° F to 125° F (-40° C to 52° C)

OPTIONS

Alarm	Single or dual, Inductive Slot Sensor (Page 57)
	4-20 mA transmitter (Page 58)
Certified Calibrations	Conform to ISA RP 16.6
CRNs	All Canadian provinces
Scales	Any volumetric unit
High Ambient Temp.	See meter maximum temperature.

7710 Specifications

Water Order Number	Full Scale Flow GPM-Water
06	33.0 GPH - ½" FNPT/ Flange
08	1.1 GPM - ½" FNPT/ Flange
10	2.0 GPM - ½" FNPT/ Flange
12	4.0 GPM - ½" FNPT/ Flange
14	6.0 GPM - ½" FNPT/ Flange
16	5.0 GPM - 1" FNPT/ Flange
18	10.0 GPM - 1" FNPT/ Flange
20	16.5 GPM - 1" FNPT/ Flange
22	25.0 GPM - 1" FNPT/ Flange
24	35.0 GPM - 1½" FNPT/ Flange
26	60.0 GPM - 1 ½" FNPT/ Flange
28	76.0 GPM - 2" FNPT/ Flange
30	100.0 GPM - 2" FNPT/ Flange
32	120.0 GPM - 2" FNPT/ Flange
34	152.0 GPM - 2" FNPT/ Flange
36	150.0 GPM - 3" Flange
38	225.0 GPM - 3" Flange
40	300.0 GPM - 4" Flange
42	375.0 GPM - 4" Flange
44	450.0 GPM - 4" Flange

Air Order Number	Full Scale Flow SCFM - Air
07	4.0 SCFM - ½" FNPT
09	8.0 SCFM - ½" FNPT
11	16.5 SCFM - ½" FNPT
13	24 SCFM - ½" FNPT
15	20 SCFM - 1" FNPT
17	42 SCFM - 1" FNPT
19	76 SCFM - 1" FNPT
21	100 SCFM - 1" FNPT

DIMENSION DIAGRAMS

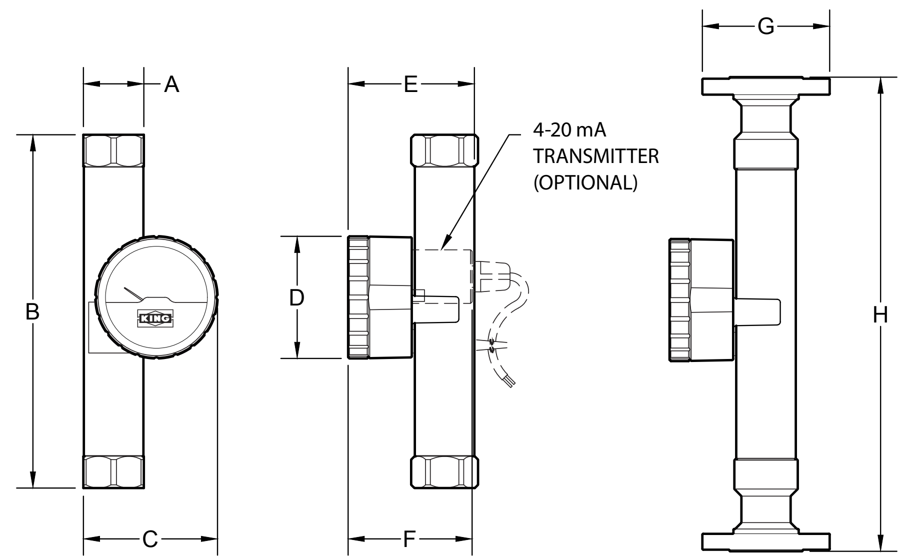

Order Number	Dimensions (Inches) FNPT Connections						150 # Flange		300 # Flange	
	A	B	C	D	E	F	G	H	G	H
06 - 14	1.30	11	4.32	4.8	3.92	4.87	3.50	13.125	3.75	13.625
15 - 22	1.88	13.24	4.86	4.8	4.50	4.87	4.25	16.75	4.88	17.500
24 - 26	2.34	13.864	5.24	4.8	4.96	4.87	5.00	18.625	6.12	19.250
28 - 34	3.46	13.875	6.35	4.8	6.08	4.87	6.00	17.156	6.50	17.786
36 - 38	4.46	—	7.26	4.8	7.08	4.87	7.50	17.867	8.25	18.867
40 - 44	5.49	—	8.24	4.8	8.11	4.87	9.00	18.562	10.00	19.696

ORDERING:

Use the following guide to determine the specific product number you require.

Meter Series	Connection Type	Float Material	O-Ring Material	Alarm/Transmitter	Scale	Order Number	CRN
7 7 _	_	_	_	_	_	_ _	_ _ _
Std. Temp - 771	FNPT Connections - 1	316L SS - 2	EPR - 1	None - 0	Standard - 7	See Specifications	Non-CRN - Blank
High Temp - 77H	150# R.F. Flanged - 2		Buna-N - 2	With Transmitter - T	Non Standard - N		CRN Req'd - CRN
	300# R.F. Flanged - 3		Viton® - 3	One Alarm - A			
	600# R.F. Flanged*		Kalrez® - 4	Two Alarms - D			

Call factory for 600# R.F. flange availability

7720 Series

Type 1, Grade 1 PVC tube meters offer chemical resistance. The dial type display makes measuring opaque fluids simple. A 4-20mA transmitter is optional.

DESCRIPTION	
Metering Tube	Type 1, grade 1 PVC
Internal Components	Hastelloy® C-276
Fitting Material	Type 1, grade 1 PVC
Inlet/Outlet Fittings	NPT or flange, vertical
O-Ring	Standard: Viton® Optional: Buna N, EPR, Kalrez®
Indicator Housing	Die-cast Aluminum / Powder Coated with Chemfilm base (RoHS Compliant) Rated IP66 (Excludes Alarm and Transmitter Cases)

PERFORMANCE	
Capacities	Water 33 GPH to 450 GPM
Scale	120 mm direct reading, detachable
Accuracy	± 3% of full scale flow
Turndown	10:1
Repeatability	1%
Maximum Temperature	130° F (54° C)
Maximum Pressure	150 psig, sizes 4 & 6
	125 psig, sizes 8, 9, 11, 12
Ambient Temperature	33° F to 125° F (1° C to 52° C)

OPTIONS	
Alarm	Single or dual, Inductive Slot Sensor (Page 57)
	4-20 mA transmitter (Page 58)
Certified Calibrations	Conform to ISA RP 16.6
Scales	Any volumetric unit

7720 Specifications

Order Number	Full Scale Flow GPM - Water
06	33.0 GPH – ½” FNPT/Flange
08	1.1 GPM – ½" FNPT/Flange
10	2.0 GPM – ½" FNPT/Flange
12	4.0 GPM – ½" FNPT/Flange
14	6.0 GPM – ½" FNPT/Flange
16	5.0 GPM – 1" FNPT/Flange
18	10.0 GPM – 1" FNPT/Flange
20	16.5 GPM – 1" FNPT/Flange
22	25.0 GPM – 1" FNPT/Flange
24	35.0 GPM – 1 ½” FNPT/Flange
26	60.0 GPM – 1 ½" FNPT/Flange
28	76.0 GPM – 2" FNPT/Flange
30	100.0 GPM – 2" FNPT/Flange
32	120.0 GPM – 2" FNPT/Flange
34	152.0 GPM – 2" FNPT/Flange
36	150.0 GPM – 3" Flange
38	225.0 GPM – 3" Flange
40	300.0 GPM – 4" Flange
42	375.0 GPM – 4" Flange
44	450.0 GPM – 4" Flange

DIMENSION DIAGRAMS

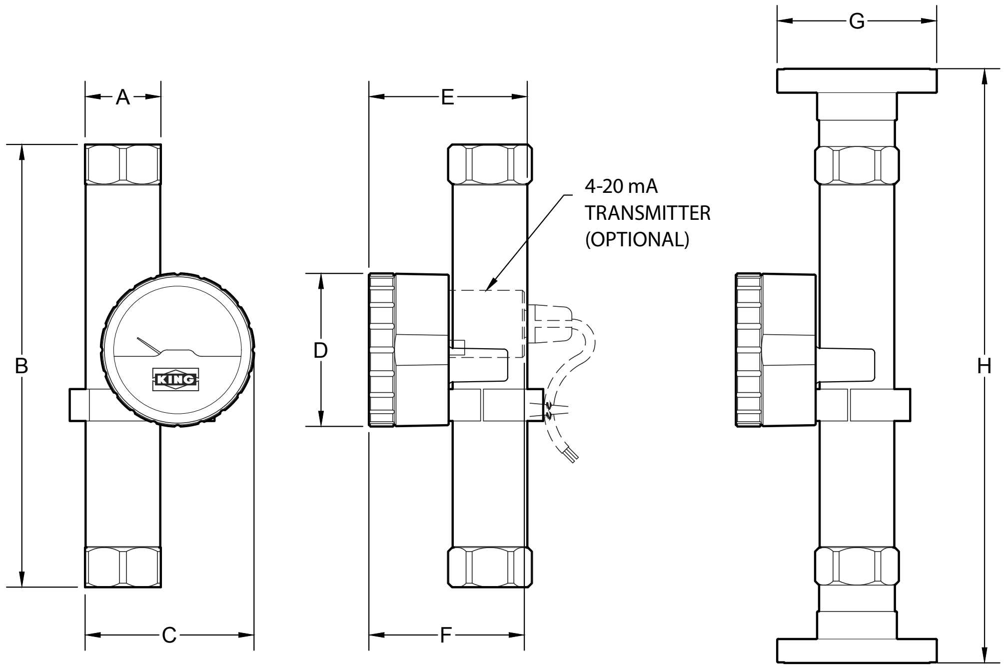

Order Number	Dimensions (Inches) FNPT Connections						150 # Flange		300 # Flange	
	A	B	C	D	E	F	G	H	G	H
06 - 14	1.30	11	4.32	4.8	3.92	4.87	3.50	13.125	3.75	13.625
16 - 22	1.88	13.24	4.86	4.8	4.50	4.87	4.25	16.75	4.88	17.500
24 - 26	2.34	13.864	5.24	4.8	4.96	4.87	5.00	18.625	6.12	19.250
28 - 34	3.46	13.875	6.35	4.8	6.08	4.87	6.00	17.156	6.50	17.786
36 - 38	4.46	—	7.26	4.8	7.08	4.87	7.50	17.867	8.25	18.867
40 - 44	5.49	—	8.24	4.8	8.11	4.87	9.00	18.562	10.00	19.696

ORDERING:

Use the following guide to determine the specific product number you require.

7 7 2	☐	☐	☐	☐	☐	☐☐
Meter Series	**Connection Type**	**Float Material**	**O-Ring Material**	**Alarm/Transmitter**	**Scale**	**Order Number**
	FNPT Connections -1	Hastelloy®C-276 - 4	EPR - 1	None - 0	Standard - 7	See Specifications
	150# Flanged - 2		Buna-N - 2	With Transmitter - T	Non Standard - N	
	300# Flanged - 3		Viton® - 3	One Alarm - A		
			Kalrez® - 4	Two Alarms - D		

7750 Series

These 316L stainless steel meters feature flange connections, all welded construction (no O-rings), and an end to end length of 250mm. A float and tapered tube design provides longer, more linear scales. A 4-20mA transmitter option adds to its versatility.

DESCRIPTION	
Overall Length	250 millimeters
Metering Tube	316L SS
Internal Components	316L SS
Inlet/Outlet Fittings	150# or 300# flange, vertical
O-Ring	All welded construction, no O-rings or gaskets
Indicator Housing	Die-cast Aluminum / Powder Coated with Chemfilm base (RoHS Compliant) Rated IP66 (Excludes Alarm and Transmitter Cases)
Flange Material	316L SS
Scale	120 mm direct reading, detachable

PERFORMANCE			
Capacities	Water 33 GPH to 16.5 GPM Air 2.2 SCFM to 76 SCFM		
Scale	120 mm direct reading, detachable		
Accuracy	± 3% of full scale flow		
Turndown	10:1		
Repeatability	1%		
Maximum Temperature	400° F (204° C)		
	Temp F	**150#**	**300#**
	200°	225 psi	600 psi
	300°	200 psi	540 psi
	400°	180 psi	515 psi
Maximum Pressure	See 150# and 300# SS flange class above		
Ambient Temperature	-40° F to 400° F (-40° C to 204° C)		

OPTIONS	
Alarm	Single or dual, Inductive Slot Sensor (Page 57)
	4-20 mA transmitter (Page 58)
Certified Calibrations	Conform to ISA RP 16.6
Scales	Any volumetric unit

7750 Specifications

Order Number	Full Scale Flow GPM-Water	Meter
06	33.0 GPH	½"
08	1.1 GPM	½"
10	2.0 GPM	½"
12	4.0 GPM	½"
16	5.0 GPM	1"
18	10.0 GPM	1"
20	16.5 GPM	1"

Order Number	Full Scale Flow SCFM - Air	Meter
05	2.2 SCFM	½"
07	4 SCFM	½"
09	8 SCFM	½"
11	16.5 SCFM	½"
15	20 SCFM	1"
17	42 SCFM	1"
19	76 SCFM	1"

DIMENSION DIAGRAMS

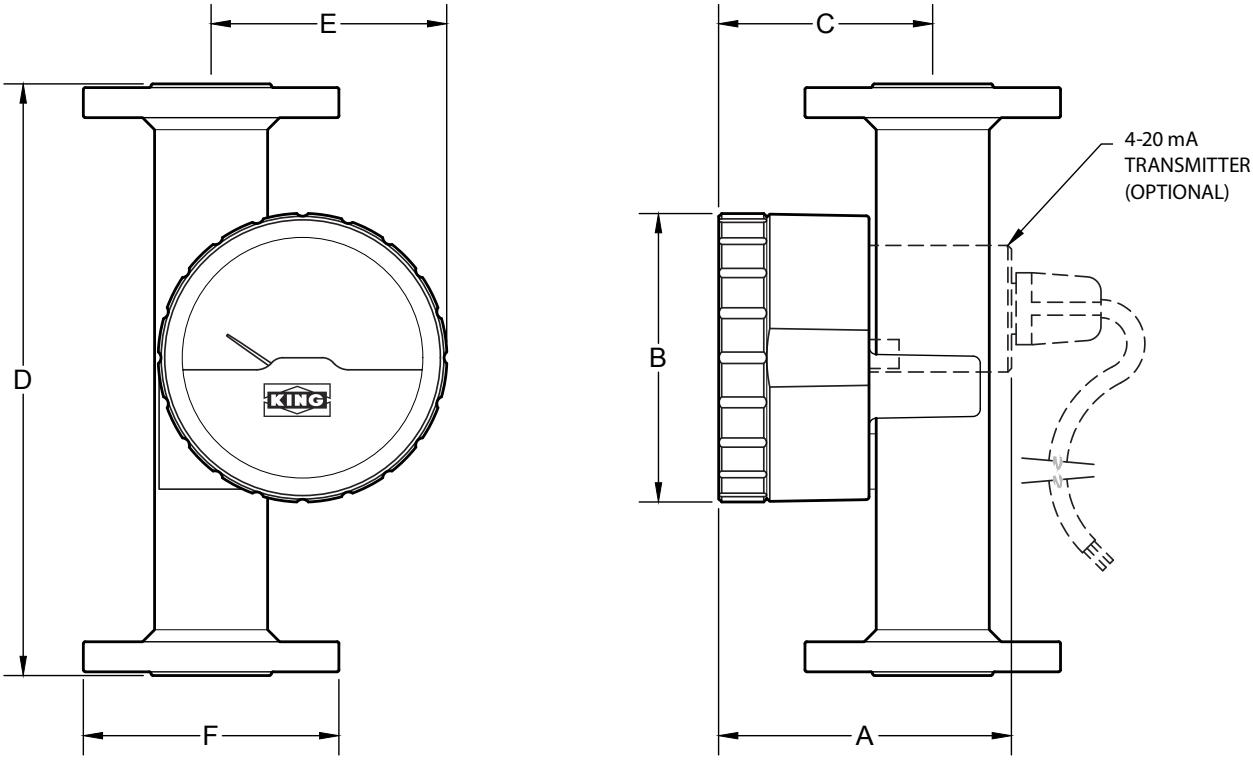

Order Number	Meter	Dimensions (Inches)					150 # Flange	300 # Flange
		A	B	C	D	E	F	F
05 - 12	½"	4.87	4.80	3.27	9.84	3.67	3.50	3.75
15 - 20	1"	4.87	4.80	3.56	9.84	3.92	4.25	4.88

ORDERING:

Use the following guide to determine the specific product number you require.

7 7 5						
Meter Series	**Connection Type** 150# R.F. Flanged - 2 300# R.F. Flanged - 3	**Float Material** 316L SS - 2	**O-Ring Material** No O-ring - 0	**Alarm/Transmitter** None - 0 With Transmitter - T One Alarm - A Two Alarms - D	**Scale** Standard - 7 Non Standard - N	**Order Number** See Specifications

7910 Series

70 flow ranges in 7 tube sizes makes these 250 mm scale glass tube, 304 Stainless steel case models one of our largest series. Dual port connections (both horizontal and vertical on each end) allow for a variety of installation options.

DESCRIPTION

Metering Tube	Borosilicate Kinglass
Internal Components	Standard: 316L SS Optional: Hastelloy C-276
Fitting Material	Standard: 316L SS Optional: PVC (vertical connections only)
Inlet/Outlet Fittings	NPT or flange, vertical or horizontal 360° fully rotatable
O-Ring	Standard: Viton Optional: Buna N, EPR, and Kalrez
Case and Covers	304 SS case Polycarbonate shield

PERFORMANCE

Capacities	Water Air	0.22 to 132 GPM 0.9 to 350 SCFM
Scale	250mm (10") direct reading, detachable	
Accuracy	± 2% of full scale flow	
Turndown	10:1	
Repeatability	0.5 %	
Maximum Temperature	316L SS fittings PVC fittings	200° F (93° C) 115° F (46° C)
Maximum Pressure	316L SS fittings 316L SS fittings 316L SS fittings 316L SS fittings PVC fittings PVC fittings	300 psig, size 3 & 4 250 psig, size 5 & 6 150 psig, size 8 125 psig, size 9 150 psig, size 3,4,5,6 & 8 125 psig, size 9
Ambient Temperature	33° F to 125° F (1° C to 52° C)	

OPTIONS

Alarm	Latching Reed Switch (Page 55)
Certified Calibrations	Conform to ISA RP 16.6
Scales	Any volumetric unit

FLOATS

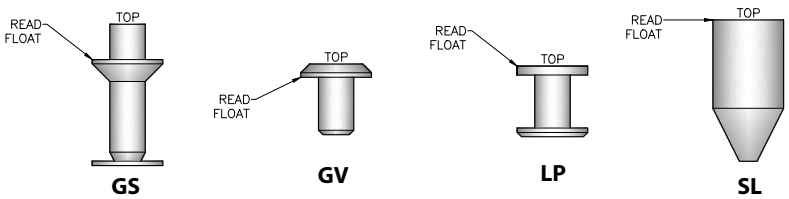

7910 Specifications

DIMENSION DIAGRAMS

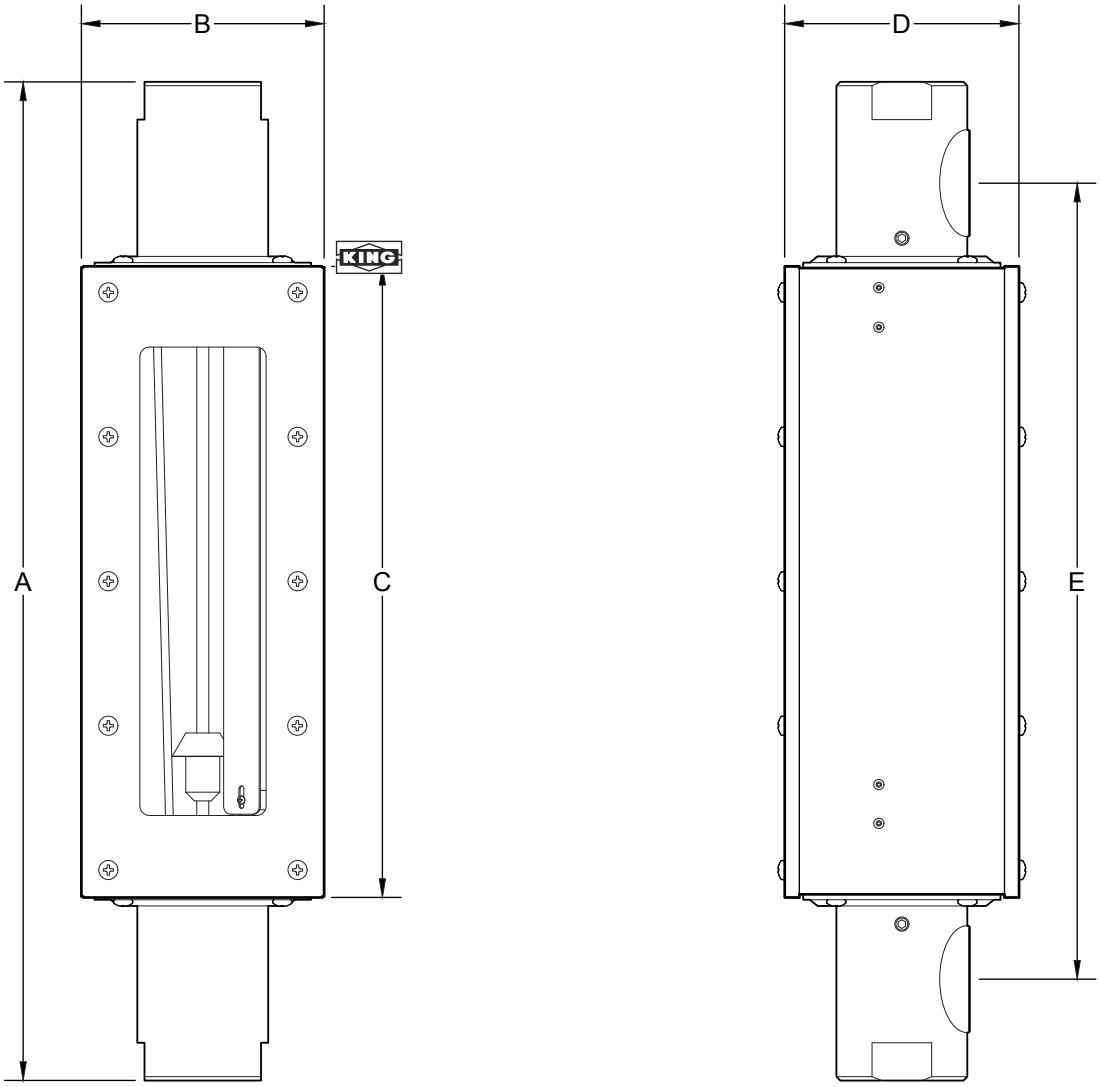

Order Number	Dimensions (Inches)					Connection Size FNPT
	A	B	C	D	E	
31 - 46	19.85	3.125	14.45	3.125	17.50	1/2" (FNPT) Flange connection are also available. Contact the factory.
51 - 69	20.75	4.625	14.46	4.50	17.45	1" (FNPT) Flange connections are also available. Contact the factory
610 - 613	20.75	4.625	14.46	4.50	17.45	1" (FNPT) Flange connections are also available. Contact the factory
84 - 99	25.65	6.25	16.25	6.125	20.50	1 1/2" Horiz., 2" Vert (FNPT) (PVC fittings vert. only) Flange connection also available. Contact the factory

7910 Specifications

Order Number	Full Scale Flow GPM - Water	Full Scale Flow SCFM - Air	Alarm Option	Float Number	Float Type	Pressure Drop (Inches of Water)	Tube Size	Tube Number*
31	0.220	.9	No	⅜-LPG-01	LP	—	3G	⅜-20-G-10
32	0.315	1.4	No	⅜-SLG-01	SL	2	3G	⅜-20-G-10
33	0.640	2.7	No	⅜-SLG-02	SL	7	3G	⅜-20-G-10
41	0.77	3.4	No	½-LPG-01	LP	6	4G	½-32-G-10
42	1.02	4.4	No	½-LPG-02	LP	10	4G	½-32-G-10
43	1.20	5.0	Yes	½-GVG-01	GV	10	4G	½-32-G-10
44	1.44	6.1	No	½-GSG-01	GS	15	4G	½-32-G-10
45	1.92	8.5	Yes	½-SLG-01	SL	28	4G	½-32-G-10
46	2.26	10.2	Yes	½-SLG-02	SL	41	4G	½-32-G-10
51	1.1	4.5	No	¾-LPG-01	LP	1	5G	¾-28-G-10
52	2.4	10.0	Yes	¾-GVG-01	GV	4	5G	¾-28-G-10
53	3.0	12.0	Yes	¾-GSG-01	GS	5	5G	¾-28-G-10
54	3.3	13.2	Yes	¾-GVG-02	GV	6	5G	¾-28-G-10
55	4.0	16.4	Yes	¾-GSG-02	GS	6	5G	¾-28-G-10
56	5.2	22.0	Yes	¾-SLG-01	SL	18	5G	¾-28-G-10
61	6.9	—	Yes	1-LPG-02	LP	4	6G	1-32-G-10
62	9.8	—	No	1-SLG-01	SL	8	6G	1-32-G-10
63	12.6	—	Yes	1-SLG-02	SL	13	6G	1-32-G-10
64	6.7	27.0	No	1-LPP-01	LP	4	6P	1-40-P-10
65	7.4	30.0	No	1-GVP-01	GV	6	6P	1-40-P-10
66	8.5	35.0	No	1-GVP-02	GV	8	6P	1-40-P-10
67	10.4	42.5	No	1-GSP-01	GS	10	6P	1-40-P-10
68	11.6	46.5	No	1-GVP-03	GV	15	6P	1-40-P-10
69	12.0	50.0	No	1-GSP-02	GS	14	6P	1-40-P-10
610	15.6	63.0	No	1-GSP-03	GS	24	6P	1-40-P-10
611	21.6	100.0	Yes	1-SLP-01	SL	61	6P	1-40-P-10
612	27.5	—	Yes	1-SLP-02	SL	85	6P	1-40-P-10
613	34.5	—	Yes	1-SLP-03	SL	110	6P	1-40-P-10
84	17.0	70.0	No	1½-GVP-01	GV	10	8P	1½-32-P-10
85	21.2	87.0	No	1½-GVP-02	GV	13	8P	1½-32-P-10
86	22.2	—	No	1½-GSP-01	GS	14	8P	1½-32-P-10
87	24.8	102.0	No	1½-GVP-03	GV	18	8P	1½-32-P-10
88	28.5	—	No	1½-GSP-02	GS	20	8P	1½-32-P-10
89	35.0	—	No	1½-GSP-03	GS	24	8P	1½-32-P-10
94	41.5	170.0	No	2-GVP-01	GV	20	9P	2-30-P-10
95	58.0	240.0	No	2-GSP-01	GS	25	9P	2-30-P-10
96	65.0	270.0	No	2-GSP-02	GS	30	9P	2-30-P-10
97	85.0	350.0	No	2-SLP-00	SL	40	9P	2-30-P-10
98	100.0	—	No	2-SLP-01	SL	50	9P	2-30-P-10
99	132.0	—	No	2-SLP-02	SL	60	9P	2-30-P-10

** Tubes designated "G" have rib-guided floats. Tubes designated "P" have pole-guided floats.*

ORDERING:

Use the following guide to determine the specific product number you require.

7 9 1	☐	☐	☐	☐☐☐*	☐	☐	☐
Meter Series	**Fitting Material** 316 Stainless steel - 2 PVC (not for air) - 3	**Float Material** 316L SS - 2 Hastelloy 276-C - 4	**O-Ring Material** EPR - 1 Buna-N - 2 Viton® - 3 Kalrez® - 4	**Order Number** See Specifications ** Only use this 3rd box with order numbers 610 thru 613. Otherwise leave blank.*	**Scale** Water GPM - W Air SCFM - A Non Standard - N	**Connection** Vertical - V Horizontal - H (PVC fittings vertical only)	**Alarm** No Alarm - 0 Alarm - A

9000 Silver Series

35 flow ranges in 6 tube sizes with full horizontal and vertical connection options make these flowmeters the most versatile removable glass tube meters available. The powder-coated 304 stainless steel case and 304 stainless steel cover with polycarbonate shield will tolerate most corrosive applications.

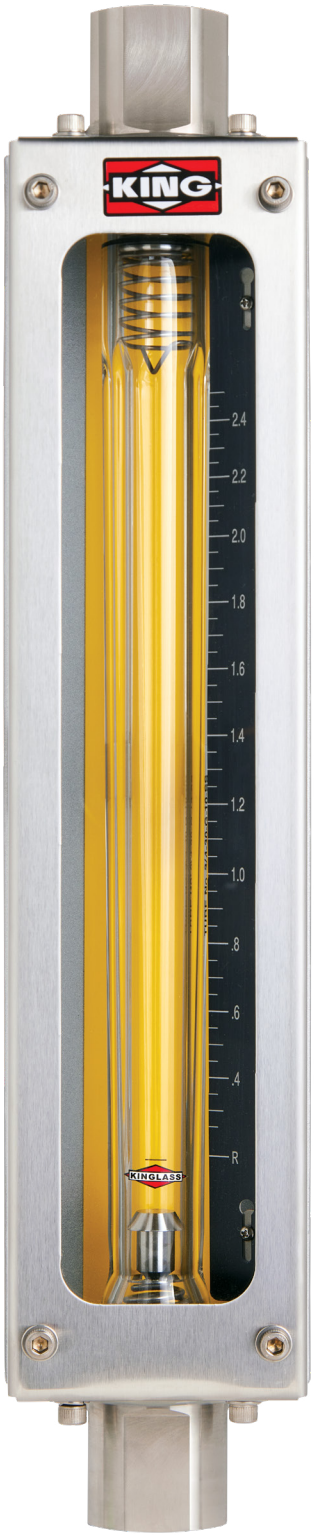

DESCRIPTION

Metering Tube	Borosilicate Kinglass
Internal Components	Standard: 316L SS Optional: Hastelloy®C-276
Fitting Material	Standard: 316L SS Optional: PVDF (FNPT Only)
Inlet/Outlet Fittings	FNPT or flange, vertical or horizontal
O-Ring	Standard: Viton® Optional: Buna N, EPR, and Kalrez®
Case	Powder-coated 304 SS
Cover	Polycarbonate shield with 304SS cover

PERFORMANCE

Capacities	Water Air	0.23 to 85 GPM 1.15 to 285 SCFM
Scale	Size 3 to 6 Size 8 to 9 direct reading, detachable scales	250 mm (10") 200 mm (8")
Accuracy	± 2% of full scale flow	
Turndown	10:1	
Repeatability	0.5%	
Maximum Temperature	316L SS fittings PVDF fittings	200° F (93° C) 200° F (93° C)
Maximum Pressure	316L SS fittings 316L SS fittings 316L SS fittings PVDF fittings PVDF fittings PVDF fittings	300 psig, size 3 & 4 250 psig, size 5 & 6 75 psig, size 8 & 9 150 psig, size 3 & 4 150 psig, size 5 & 6 75 psig, size 8 & 9
Ambient Temperature	33° F to 200°F (1° C to 93° C)	

OPTIONS

Alarm	Latching Reed Switch (Page 56)
Certified Calibrations	Conform to ISA RP 16.6
Scales	Any volumetric unit.

FLOATS

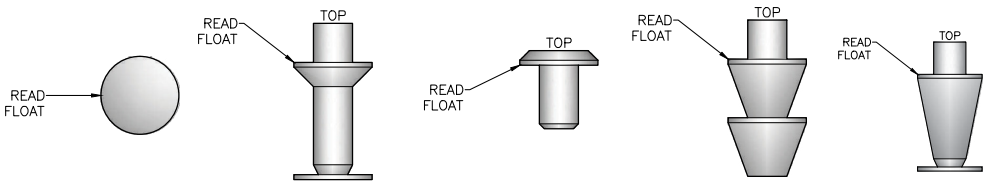

BL **GS** **GV** **LJ** **HF**

9000 Silver Series Specifications

DIMENSION DIAGRAMS

Vertical FNPT
Front View

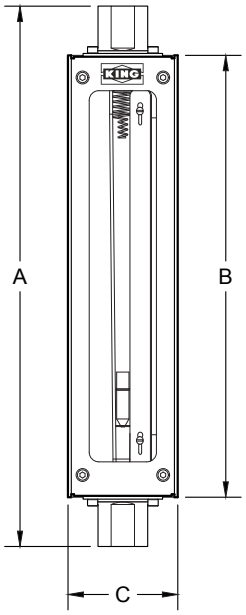

Mounting Studs
Back View
(31 - 67 Only)

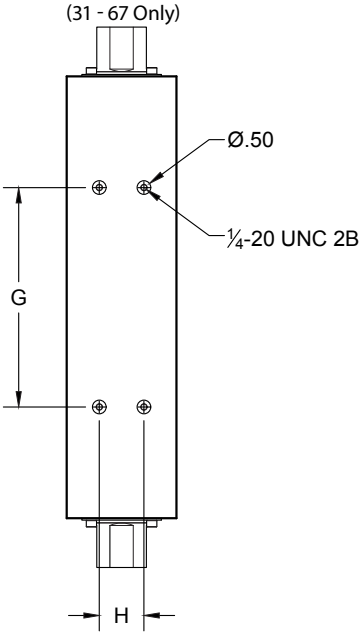

Alarm
Connection

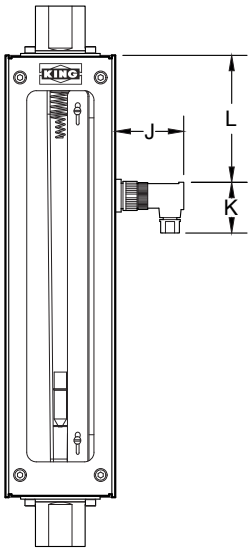

Horizontal FNPT
Side View

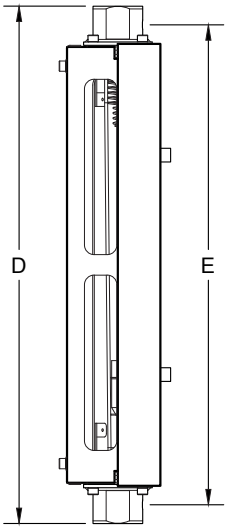

Vertical Flange
Side View

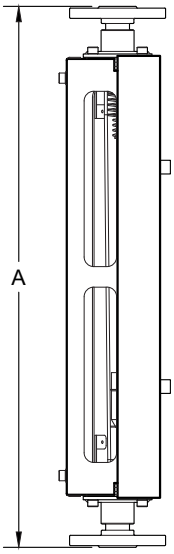

Horizontal Flange
Side View

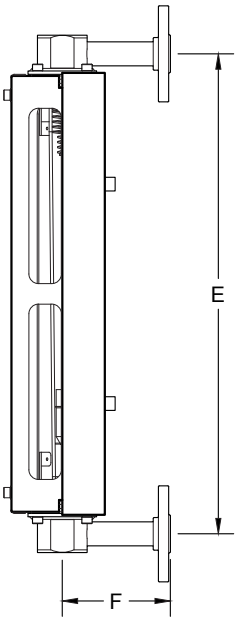

Order Number	Case And Fittings (Inches)						Mounting		Alarm Connection		
	A	B	C	D	E	F	G	H	J	K	L
31 - 47	19.70	16.1	4.13	18.86	17.5	3.94	8.00	1.63	2.5	1.85	4.63
51 - 67	19.70	16.1	4.13	18.86	17.5	4.72	8.00	1.63	2.5	1.85	4.63
81 - 95	19.78	16.3	5.75	23.26	20.5	5.12	*	*	2.5	1.85	4.83

** MOUNTING STUDS ARE NOT AVAILABLE IN SIZE 8 AND 9*

9000 Silver Series Specifications

GLASS TUBE

Order Number	Full Scale Flow GPM - Water	Full Scale Flow SCFM - Air	Float Number	Float Type	Alarm Option	Pressure Drop (Inches of Water)	Connection Size FNPT	Connection Size Flange
31	0.23	1.15	3-BLG-01	BL	No	4	½"	½"
32	0.49	2.10	3-BLG-02	BL	No	4	½"	½"
33	.64	2.64	3-HFG-01	HF	Yes	4	½"	½"
34	.77	3.20	3-LJG-01	LJ	Yes	4	½"	½"
41	1.1	4.20	4-GVG-01	GV	Yes	6	½"	½"
42	1.3	5.50	4-GSG-01	GS	Yes	6	½"	½"
43	1.5	6.20	4-GVG-02	GV	Yes	8	½"	½"
44	1.8	7.60	4-GSG-02	GS	Yes	9	½"	½"
45	2.2	9.00	4-GSG-03	GS	Yes	15	½"	½"
46	2.5	10.2	4-GSG-03	GS	Yes	19	½"	½"
47	3.4	14.0	4-GSG-04	GS	Yes	27	½"	½"
51	2.5	10.0	5-GVG-01	GV	Yes	6	¾"	1"
52	3.0	12.0	5-GSG-01	GS	Yes	6	¾"	1"
53	3.5	14.4	5-GSG-02	GS	Yes	10	¾"	1"
54	4.0	16.4	5-GVG-02	GV	Yes	15	¾"	1"
55	5.0	20.0	5-LJG-01	LJ	Yes	41	¾"	1"
61	6.5	26.8	6-GSG-01	GS	Yes	13	¾"	1"
62	7.0	28.8	6-GVG-01	GV	Yes	20	¾"	1"
63	8.2	34.0	6-GSG-02	GS	Yes	27	¾"	1"
64	10.5	44.0	6-GVG-02	GV	Yes	30	¾"	1"
65	13.0	54.0	6-GSG-03	GS	Yes	32	¾"	1"
66	16.0	66.0	6-GVG-03	GV	Yes	48	¾"	1"
67	20.0	82.0	6-HFG-01	HF	Yes	97	¾"	1"
81	15.0	61.0	8-GVG-01	GV	Yes	8	1 ½"	1 ½"
82	20.0	82.0	8-GVG-02	GV	Yes	13	1 ½"	1 ½"
83	25.0	103.0	8-GVG-03	GV	Yes	22	1 ½"	1 ½"
84	28.0	122.0	8-GSG-01	GS	Yes	30	1 ½"	1 ½"
85	32.0	145.0	8-GSG-02	GS	Yes	24	1 ½"	1 ½"
86	36.0	155.0	8-HFG-01	HF	Yes	43	1 ½"	1 ½"
91	41.0	165.0	9-GVG-01	GV	Yes	28	1 ½"	1 ½"
92	50.0	195.0	9-GVG-02	GV	Yes	44	1 ½"	1 ½"
93	60.0	245.0	9-GSG-01	GS	Yes	36	1 ½"	1 ½"
94	70.0	285.0	9-HFG-01	HF	Yes	62	1½"	1 ½"
95	85.0	---	9-LJG-01	LJ	Yes	88	1½"	1 ½"

** MOUNTING STUDS ARE NOT AVAILABLE IN SIZE 8 AND 9*

ORDERING:

Use the following guide to determine the specific product number you require.

9	0	0						
Meter Series	**Fitting Type/Material**	**Float Material**	**O-Ring Material**	**Order Number**	**Scale**	**Alarm**
	Vertical FNPT - 316L SS - 1 Horizontal FNPT - 316L SS - 2 Vertical Flange -316L SS - 150# - 3 Horizontal Flange -316L SS- 150# - 4 Vertical Flange -316L SS - 300# - 5 Horizontal Flange -316L SS - 300# - 6 Vertical FNPT - PVDF - 7 Horizontal FNPT - PVDF - 8	316L SS - 2 Hastelloy® C-276 - 4 Glass - 5 (31A & 31W only)	EPR - 1 Buna-N - 2 Viton® - 3 Kalrez® - 4	See Specification above	Water GPM - W Air SCFM - A Non Standard - N	No Alarm - 0 With Alarm - 1 Dual Alarm - 2 See Specification table for availability

Latching Reed Switch

Latching Reed Switch alarm available for 7310, 7330, 7470, 7480, 7610, 7910 Series

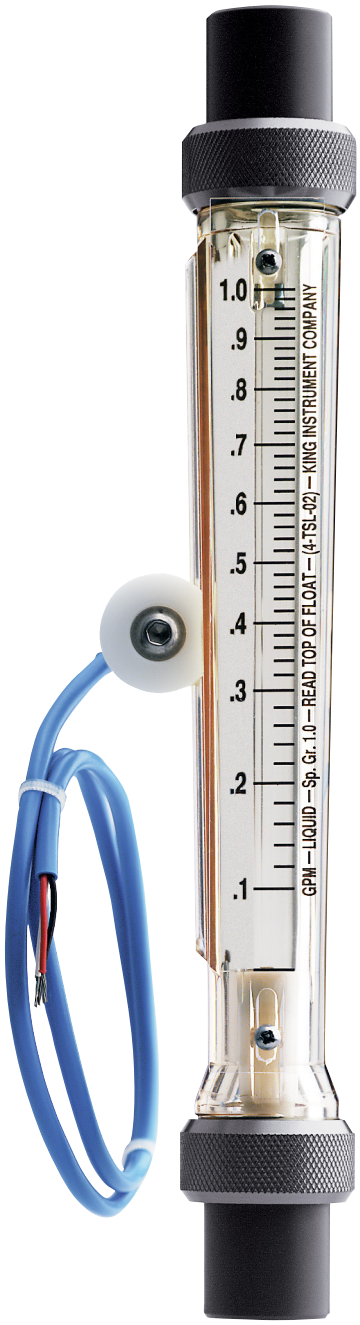

7330 with Latching Reed Switch

A latching reed switch is available for 7310, 7330, 7470, 7480, 7610, 7910 Series flowmeters. Operating temperature range is -40° C to 125° C.

The switch assembly is mounted on the side of the metering tube by a dovetail or guide rod. The switch can be positioned to trip at any point on the scale.

The switch is a reed type and uses a biassing magnet to give it the latching feature. The float contains hermetically sealed magnet(s), so when the float comes in close proximity to the switch it closes and remains closed (latched) when the float moves past the switch. When the flow returns to normal and the float moves below the switch it resets itself. Multiple switches can be used.

ELECTRICAL SPECIFICATIONS FOR LATCHING REED SWITCH	
Switch Type	SPDT, Latching
Max Contact Voltage	100 VDC
Max Contact Current	0.2 A DC
Max Contact Power	4 Watts DC
Breakdown Voltage	200 VDC
Initial Contact Resistance	0.15 OHMS
Standard Pull-In Range	15-40 ampere turns
Intrinsically Safe Wiring	With switch Isolator 3 conductor, 22 Awg, 2' long 1) White, N.O. switch output 1 2) Red, common 3) Black, N.C. switch output 2

Latching Reed Switch

Latching Reed Switch alarm available for the 9000 Silver Series

9000 Silver Series with Latching Reed Switch

The latching reed switch is an available option for the 9000 Series Flowmeter.

The switch assembly is mounted on the side of the metering tube by a dovetail or guide rod. The switch can be positioned to trip at any point on the scale.

The switch is a reed type and uses a biassing magnet to give it the latching feature. The float contains hermetically sealed magnet(s), so when the float comes in close proximity to the switch it closes and remains closed (latched) when the float moves below the switch it resets itself. Multiple switches can be used.

Operating temperature range is -40° C to 125° C.

LATCHING REED SWITCH ELECTRICAL SPECIFICATIONS	
Switch Type	SPST
Power	4W Max
Switching Voltage	30VDC Max
Breakdown Voltage	200VDC Min
Switching Current	0.2 A Max
Carry Current	1.4 A Max
Initial Contact Resistance	.020 Ohm Max @ 50% Magnetic Overdrive

CONNECTIONS	
Single Switch	**Dual Switch**
1(+), 2(-)	**High Switch** 1(+), 2(-)
	Low Switch 4(+), 5(-)

Inductive Slot Sensor

Inductive Slot Sensor alarm available for 7100, 7710, 7720, 7750 Series

7100 with Inductive Slot Sensor

All 7100, 7710, 7720 and 7750 Series flow meters may be fitted with one inductive slot sensor. The 7710, 7720 and 7750 Series may be fitted with two inductive slot sensors.

Inductive sensors are 2-wire, DC low current devices and are designed to be used with a remote barrier/switch isolator capable of powering the sensor and providing the desired switching option(s). Barrier/switch isolators are available with 220 VAC, 110 VAC or 24 VDC supply voltage requirements, contain single pole, double throw (SPDT) relays, and are DIN rail mountable. (Only 24 VDC units are actually powered by the rail.) See barrier/switch isolator specifications for electrical connections and further details. (Page 61)

The operating temperature range for this sensor is -13° F to158° F (-25° C to 70° C).

Note: We can supply the isolator / barrier upon request, but the user must provide the power supply voltage.

ELECTRICAL SPECIFICATIONS	
Type	Inductive
Supply Voltage	5-25V DC (Switch Isolator)
Output	NAMUR
Output Load Current	<=1 mA – Float Present >= 3 mA (15 mA Max.) –Float Absent
Switching Frequency	5 kHZ
Housing Rating	IP67
Wiring	2 Conductor, NAMUR Pos = Brown, Neg.= Blue
Terminals	#1=Pos., #2=Neg.
Pepperl & Fuchs Slot Sensor Approvals:	**UL:** General Purpose **FM:** Intrinsically Safe **CSA:** Intrinsically Safe **CENELEC:** Intrinsically Safe

7750 with Inductive Slot Sensor

4-20 mA Transmitter

4-20 mA Transmitter for 7710, 7720, 7750

7710 with 4-20 mA Transmitter

To convert the measured flow into a 4-20 mAdc signal, a magnetic angle transmitter is mounted to the meter tube. This device is factory calibrated to ensure accuracy and should only be adjusted by King Instrument Company.

The transmitter housing location is set at the factory. Do not loosen screws and move housing. Do not remove transmitter from housing. Doing so will affect the accuracy of the transmitter and will need to be sent back to the factory to be reset.

SPECIFICATIONS

Power Supply	8-28V DC
Maximum Current Consumption	100 mA
Temperature Limits	-20° to 150° F (-30° to 65° C)
Output	4 to 20 mAdc
Accuracy	<= 0.5%

ELECTRICAL CONNECTIONS

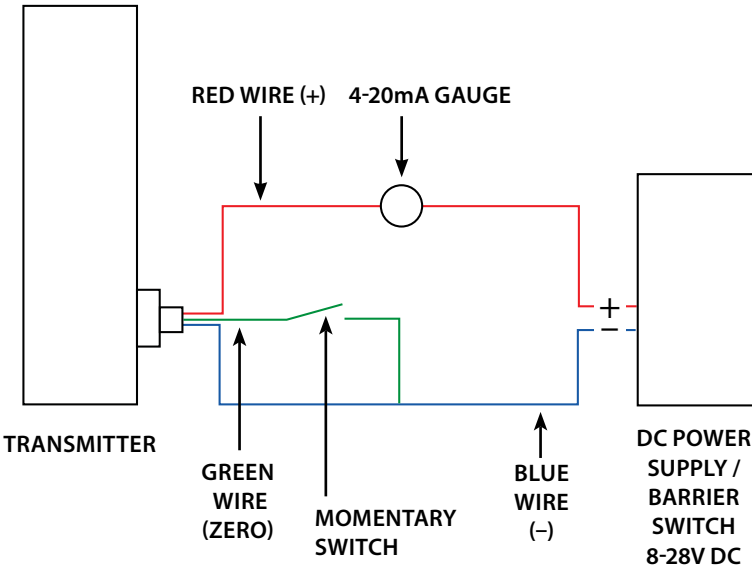

TRANSMITTER - WIRING

The transmitter Red (+) wire should be powered thru the gauge. Using the Blue (-) wire can give inaccurate readings.

A momentary switch should be installed using the Green wire connected to the Blue (-) wire. The zero function is used to set a zero point after the meter is installed. While the power to the transmitter is on, hold the momentary button for 2 seconds to set the zero. This should only be done when there is no flow present and the float is at its zero point. Zeroing should be done on a periodic maintenance check.

If a barrier switch is being used, all wiring to the transmitter shall be after the barrier switch. Wiring the gauge and zero wire before the barrier switch will give inaccurate results.

Inductive Ring Sensor

Inductive Ring Sensor alarm available for 7430, 7440 Series

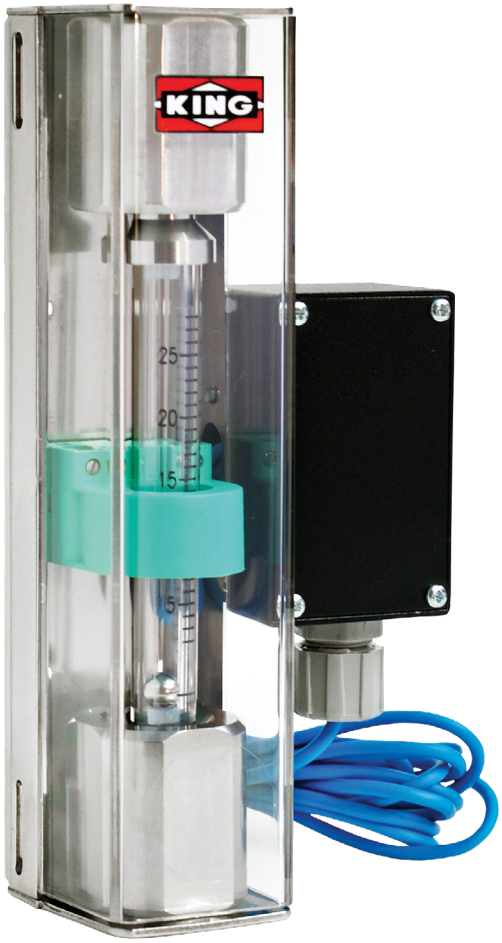

7440 with Inductive Ring Sensor

7440 Series flowmeters with metallic floats can be ordered with an inductive ring sensor that is able to detect a predetermined rate of flow and is compatible with stainless steel or Carboloy floats only.

Inductive ring sensors are 2-wire, DC, low current devices and are designed to be used with a remote intrinsic safety barrier /switch isolator. Sensors are available as either proximity or latching devices. The sensor can be positioned to trigger at any point on the scale. It is able to detect the metal float by producing an electromagnetic field that senses the float within its sensing zone.

The inductive sensor connects to a barrier/switch isolator which powers the sensor and provides the desired switching option. Barrier/switch isolators are available with 220VAC, 110VAC or 24VDC supply voltage requirements, contain single pole double throw (SPDT) relays, and are DIN rail mountable. See barrier/switch isolator specifications for electrical connections and further details. (Page 61)

Note: We can supply the safety barriers/switch isolators upon request. User must provide the power supply voltage.

INDUCTIVE RING SENSOR ELECTRICAL SPECIFICATIONS	
Type	Inductive Proximity or Latching
Supply Voltage	5-25V DC (Switch Isolator)
Output	NAMUR
Output Load Current	<=1 mA – Float Present >= 3 mA (15 mA max) – Float Absent
Switching Frequency	2 kHZ
Housing Rating	IP67
Wiring	PVC Covered, 2 Conductor, 26 AWG, 6.5 Feet Long. Brown (+), Blue (–)
Pepperl & Fuchs Ring Sensor Approvals	**UL:** General Purpose **FM:** Intrinsically Safe **CSA:** Intrinsically Safe **CENELEC:** Intrinsically Safe
Electrical Connections	See barrier/switch isolator specifications for details. (Page 61)
Max Operating Temperature	40° C for 1/8" float; 70° C for 1/4" float.

Fiber Optic Sensor

Fiber Optic Sensor available for 7440 Series

7440 with Fiber Optic Sensor

The fiber optic alarm sensor is an available option for all 7440 Series flowmeters and is compatible with all float materials except sapphire. The sensor is used to detect a predetermined rate of flow. The sensor can interface directly to a Programmable Logic Controller (PLC) or when connected to a separate relay can trigger a local or remote alarm.

The fiber optic sensor is mounted in a junction box attached to the side of the flowmeter. The sensor uses a pair of fiber optic cables, an emitter and receiver, to transmit the light generated by the sensor. Note: Maximum operating temperature 131° F.

FIBER OPTIC SENSOR ELECTRICAL SPECIFICATIONS	
Supply Voltage	10-30 VDC
Supply Current	25 mA
Output	NPN Sinking, N.O. & N.C. PNP Sourcing, N.O. & N.C.
Output Rating	150 mA Max Total Load
Output Response Time	1ms
Off State Leakage Current	1 MICOAMP @ 30 VDC
Output Saturation Voltage	< 1 V at 10 mA DC < 1.5 V at 150 mA DC
Repeatability	0.25 ms
Housing Rating	IP67; NEMA 6
Operating Temperature	-5° to +131° F

Barrier/Switch Isolator

BARRIER/SWITCH ISOLATOR

A barrier/switch isolator is designed to supply power to the NAMUR sensor, read the output state of the sensor and provide the desired safety and switching options based on the sensors current state. The barrier/switch isolator has three sets of connections: the supply voltage (powers the barrier), an input stage (accepts sensor inputs), and an output stage (relay or transistor switching). Supply voltages are 220VAC, 110VAC, or 24VDC. Switch isolators may receive an input from inductive sensors or dry mechanical contacts. The input circuit between the sensor or mechanical contact and the switch isolator is suitable to be installed in a hazardous area under the designation "Intrinsically Safe". Supply voltage and switching options must be specified when ordering.

SINGLE CHANNEL BARRIER/SWITCH ISOLATORS (I.S.)

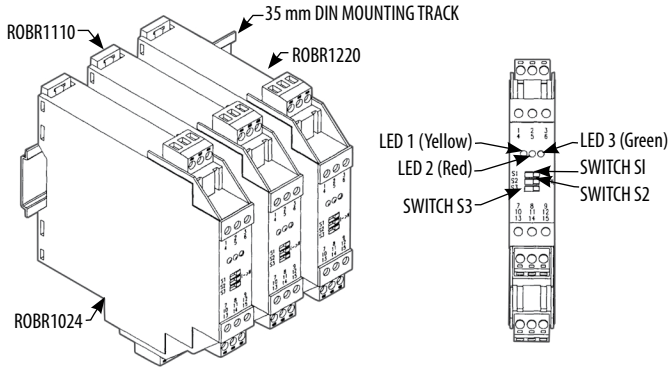

SINGLE CHANNEL OPTIONS

ORDER NUMBER	POWER SUPPLY	PEPPERL & FUCHS #	OUTPUT
ROBR1024	DC 20V-30V	KFD2-SR2-EX1.W	1 SPDT RELAY AC: 250V/2A DC: 40V/2A
ROBR1110	AC IO4-126V	KFA5-SR2-EX1.W	
ROBR1220	AC 207V-253V	KFA6-SR2-EX1.W	

RECOMMENDED USE

PRODUCT LINE	ALARM OPTION
7310/7330 Series	Single Latching Reed Switch
7430/7440 Series	Proximity or Latching Inductive Namur Ring Sensor
7470 Series	Single Latching Reed Switch
7480 Series	Single Latching Reed Switch
7610 Series	Single Latching Reed Switch
7710/7720/7750 Series	Single Inductive Namur Slot Sensor
7910 Series	Single Latching Reed Switch
9000 Series	Single Latching Reed Switch

DUAL CHANNEL BARRIER/SWITCH ISOLATORS (I.S.)

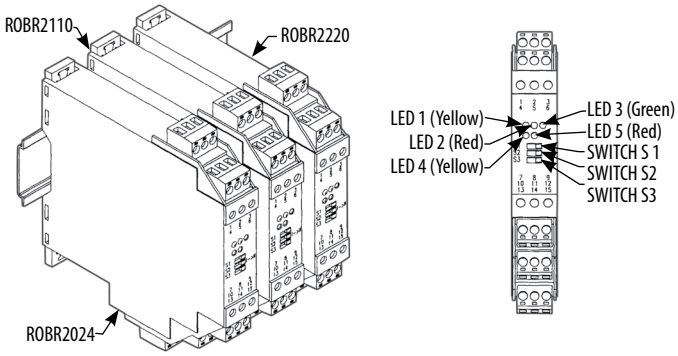

DUAL CHANNEL OPTIONS

ORDER NUMBER	POWER SUPPLY	PEPPERL & FUCHS #	OUTPUT
ROBR2024	DC 20V-30V	KFD2-SR2-EX2.W	2 SPDT RELAY AC: 250V/2A DC: 40V/2A
ROBR2110	AC IO4-126V	KFA5-SR2-EX2.W	
ROBR2220	AC 207V-253V	KFA6-SR2-EX2.W	

RECOMMENDED USE

PRODUCT LINE	ALARM OPTION
7310/7330 Series	Dual Latching Reed Switch
7470 Series	Dual Latching Reed Switch
7480 Series	Dual Latching Reed Switch
7610 Series	Dual Latching Reed Switch
7710/7720/7750 Series	Dual Inductive Namur Slot Sensor
7910 Series	Dual Latching Reed Switch
9000 Series	Dual Latching Reed Switch

Correction Formula

Liquid Correction Formula

Information required to size for conditions other than water:

- Specific Gravity of Fluid (@ Operation Conditions)
- Fluid Temperature (@ Operation Conditions)
- Viscosity (@ Operation Conditions)

RATE OF FLOW UNIT CONVERSIONS:	
GMP (FLOWING LIQUID)	CC/MIN (FLOWING LIQUID)
= GPH / 60	= GPM x 3,785
= CC/MIN / 3,785	= GPH x 63.08
= CC/HR / (3,785 X 60)	= CC/HR / 60
= LPM / 3.785	= LPM x 1,000
= LPH / 227.1	= LPH x 16.67
= M3/MIN x 264.2	= M3/MIN x 1,000,000
= M3/HR x 4.402	= M3/HR x 16,667
= PINTS/MIN / 8	= PINTS/MIN x 473.1
= FT3/MIN x 7.48	= FT3/MIN x 28,320
= FT3/HR x 8.021	= FT3/HR x 472
= Kg/MIN x 0.264 / Sp. Gr.	= Kg/MIN x 1,000 / Sp. Gr.
= Kg/HR / (227 x Sp. Gr.)	= Kg/HR x 16.67 / Sp. Gr.
= Lbs/MIN / (8.347 x Sp. Gr.)	= Lbs/MIN x 453.6 / Sp. Gr.
= Lbs/HR / (500.8 x Sp. Gr.)	= Lbs/HR x 7.56 / Sp. Gr.
= GRAMS/MIN / (3,785 x Sp. Gr.)	= GRAMS/MIN / Sp. Gr.
= GRAMS/HR / (227,000 x Sp. Gr.)	= GRAMS/HR / (60 x Sp. Gr.)

CORRECTION FORMULA:

$$\sqrt{\frac{\text{Float Density - Customer Fluid}}{\text{(Float Density - 1.0) * Customer fluid}}}$$

FLOAT DENSITY:

Teflon: 2.20
Glass 2.53
Sapphire: 3.989
Titanium: 4.5
316L SS: 8.03
316SS: 8.04
Hastelloy® C-276: 8.94
Carboloy: 15.0
Tantalum: 16.6

FLUID DENSITY CONVERSIONS

SP. GR. = LBS/FT3 / 62.4
= KG/M3 / 1000
= G/CM3
= 141.5 / (131.5 + API)

Gas Correction Formula

Information required to size for conditions other than air at STP:

- Operating Temperature
- Operating Back Pressure
- Specific Gravity of Fluid @ STP

RATE OF FLOW UNIT CONVERSIONS:	
SCFM (FLOWING GAS)	SCC/MIN (FLOWING GAS)
= SCFH / 60	= SCFM x 28,317
= SLPM / 28.317	= SCFH x 472
= SLPH / 1,699	= SCIM x 16.39
= SM3/MIN x 35.31	= SLPM x 1,000
= SM3/HR x 0.5885	= SLPH x 16.67
= NM3/MIN x 37.99	= SM3/MIN x 1,000,000
= NM3/HR x 0.6331	= @ SM3/HR x 16,667
= SCC/MIN / 28,317	= NM3/MIN x 1,075,785
= Kg/MIN x 29.39 / Sp. Gr.	= NM3/HR x 17,929
= Kg/HR x 0.490 / Sp. Gr.	= Kg/MIN x 832,000 / Sp. Gr.
= @ Lbs/MIN x 13.33 / Sp. Gr.	= Kg/HR x 13,876 / Sp. Gr.
= Lbs/HR x 0.2222 / Sp. Gr.	= Lbs/MIN x 377,500 / Sp. Gr.
= Lbs/Day x 0.00926 / Sp. Gr.	= Lbs/HR x 6292 / Sp. Gr.
= ACFM x (Oper PSIG + 14.7) x 530 / 14.7 x (Oper temp F + 460)	

CORRECTION FORMULA:

$$\sqrt{\frac{\text{(oper. back pressure + 14.7) x 36}}{\text{Gas S.G. x (Oper. Temp F + 460)}}}$$

TEMPERATURE CONVERSIONS:

Deg. F = (9 / 5) x °C) + 32
= °K – 459.67
= (9 /5) x (°R – 273.15) + 32

FLUID DENSITY CONVERSIONS:

SP. GR. = LBS/FT3 /0.075
= KG/M3 / 1.2
= Mol. Wt. / 29.0
= g/cm3 /0.0012

PRESSURE CONVERSIONS:

PSIG = FT. Water / 2.308
= In. Water
= mm Water / 704
= In. Hg / 2.036
= mm Hg / 51.7
= Kg/cm2 x 14.228
= (KPa / 101.3) x 14.7
= (Pa / (1.013 x 100,000) x 14.7
= PSIA – 14.7
= (ATM x 14.7) – 14.7
= ((TORR / 760) x 14.7) - 14.7
= ((Bars / 1.013) X 14.7) –14.7
= (Millibars / 1013) x 14.7) – 14.7

Warranty & Policies

WARRANTY

Meters are warranted against defects in materials and workmanship to the original user for a period of thirteen (13) months from the date of factory shipment, provided the meter is installed, operated and maintained in accordance with the Company's instructions and recommendations.

This warranty does not apply if the failure is caused or contributed to by any of the following: improper handling, improper storage, improper installation, abuse, unsuitable application of the product, lack of reasonable and necessary maintenance, use exceeding suggested pressure and temperature maximums, improper packaging for return, or repairs made or attempted to be made by other than the Company.

THE COMPANY MAKES NO WARRANTY AS TO THE FITNESS OF ITS PRODUCTS FOR SPECIFIC APPLICATIONS.

This warranty is valid for the original end-user only and does not apply to products that have been damaged or modified. This warranty is nontransferable and is limited to replacement or repair. The liability of the Company arising out of its supply of the products, or their use, shall not in any case exceed the cost of correcting defects in the products as above set forth.

NOTE: If it is determined by King Instrument Company that repair charges are required, our Sales Department will contact you to receive a purchase order for the work needed. If we do not receive a purchase order from you within 30 days from our initial request, we will return the meter freight collect without repair. We are unable to store returned meters over 60 days.

DISCLAIMER

This warranty is a limited warranty and shall be in lieu of any other warranties, express or implied, including but not limited to any implied warranty or merchantability or fitness for a particular purpose. There are no other warranties which exist beyond the description or face hereof.

In no event shall the company be liable for loss of profits, indirect, consequential or incidental damages.

CAUTION

Pressure and temperature limits are based on a study of the engineering data for particular materials used in construction and on the design of individual models. This information is supplemented by destructive testing results. Pressure and temperature maximums for these meters are simultaneous.

WARNING

Meters with stainless enclosures must never be operated without shields securely in place. Meters exposed to difficult environments such as those created by certain chemicals, excessive vibration or other stress inducing factors could fail at or below the suggested maximums. NEVER operate meters above pressure and temperature maximums. Meter failure could result in damage to equipment and serious personal injury.

Always use suitable safety gear including OSHA approved eye protection when working around meters in service. We are happy to pass along chemical compatibility information that has been published by the manufacturers of raw materials used in our products; however, this information should not be construed as a recommendation made by King Instrument Company, Inc. for a specific application. Specifications are subject to change without notice.

RETURNED GOODS

Returns for shortages or inaccurate shipments must be made to King Instrument Company within ten days of receipt. A Return Materials Authorization (RMA) number is required for all returns shipped for repair, warranty evaluation, replacement, exchange or credit. Please call the sales department for an RMA number. A copy of the invoice or shipper must be included. The RMA number must be clearly marked on the shipping package. Return meter in individual packaging equivalent to original packaging. When returning meters that have been in service, include MSDS of chemicals used. Ensure that the meters have been cleaned or flushed of any hazardous materials. There may be a restocking charge on items that are returned when the error is not King Instrument Company's. Items over one year old are not returnable. Damaged shipments should be handled through the shipping carrier. C.O.D. return shipments will not be accepted. If there are any questions call the sales department Monday through Friday, 7:00 a.m. to 3:30 p.m., Pacific Time.

©2024 King Instrument Company, Inc. All rights reserved

kinginstrumentco.com

12700 Pala Drive
Garden Grove, CA 92841
Phone: (714) 891-0008
Fax: (714) 891-0023

© King Instrument Company 2026